KINGMAN AREA
MASTER DRAINAGE PLAN

APPENDICES - VOLUME 1

HYDROLOGY / HYDRAULIC DETAILS

June 1988

BOYLE ENGINEERING CORPORATION
consulting engineers / architects

PREFACE

In March 1987 the City of Kingman contracted with Boyle Engineering Corporation to prepare a Master Drainage Plan for the greater Kingman Area. The work was to include a Drainage Design and Administrative Manual, A Master Drainage Plan, a more detailed analysis of the Bull Mountain Drainage Basin, and an Executive Summary of the entire project.

The results of the study are presented in the following documents:

Executive Summary	
Master Drainage Plan	
Appendices - Volume 1	Hydrology/Hydraulic Details
Appendices - Volume 2	Bull Mountain Basin Southeast Area Drainage
Design and Administrative Manual	

This document is **Appendices - Volume 1 Hydrology/Hydraulic Details.**

APPENDIX A HYDROLOGY DETAILS

HEC-1 Schematic Flow Diagram		A 0
Table A1	Subbasin Hydrology Data	A 1
Table A2	Channel Routing Data	A 3
Table A3	Design Discharges Adjusted for Area	A 5
HEC-1 Input	Basin A and C - 100%	A 8
HEC-1 Output	Basin A and C - 100%	A18
HEC-1 Input	Basin A and C - 80%	A27
HEC-1 Output	Basin A and C - 80%	A28
HEC-1 Input	Basin B - 100%	A37
HEC-1 Output	Basin B - 100%	A40
HEC-1 Input	Basin B - 92%	A42
HEC-1 Output	Basin B - 92%	A43

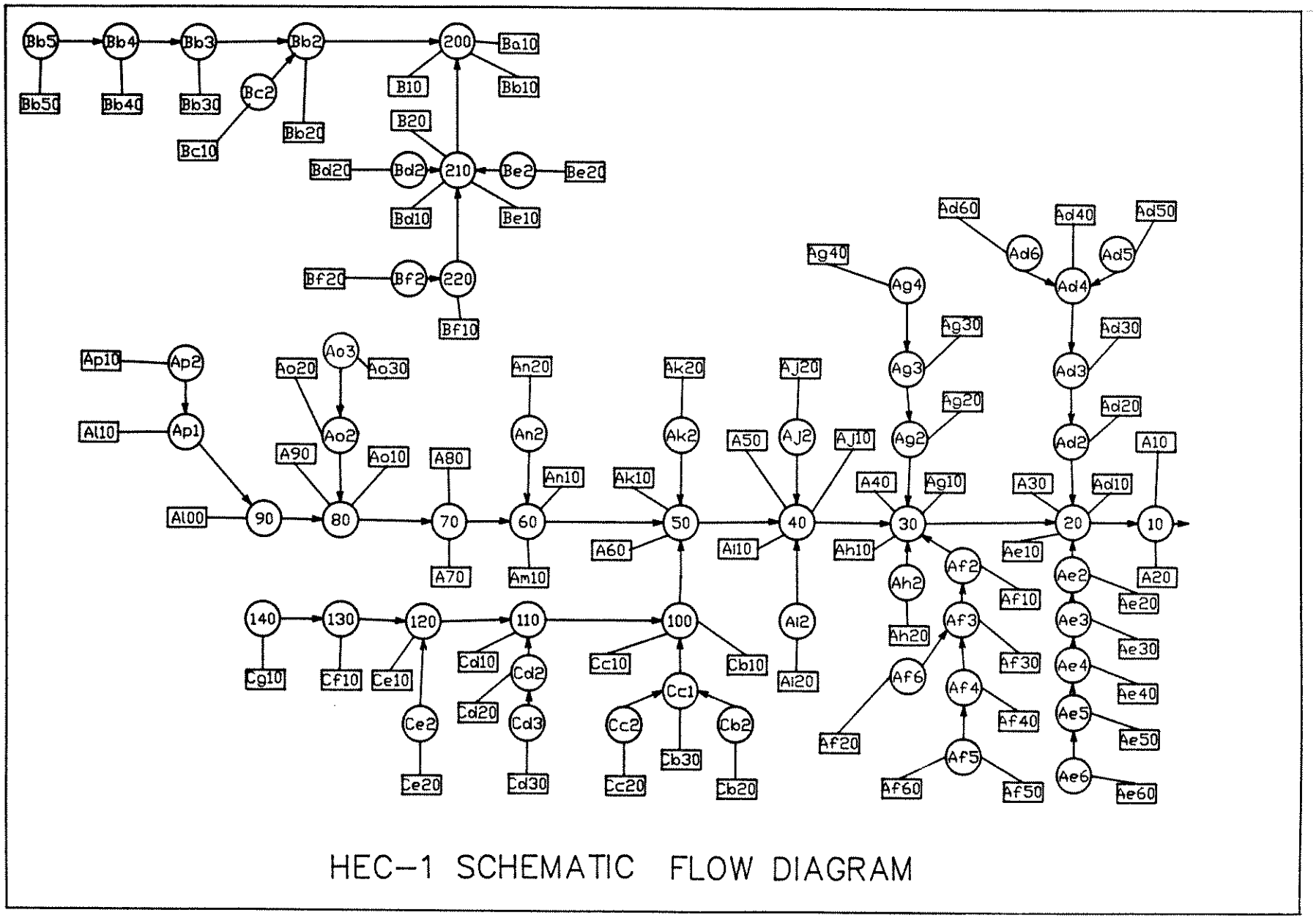

HEC–1 SCHEMATIC FLOW DIAGRAM

Table A1 Subbasin Hydrology Data

Basin	Channel	Sub Basin	Area (sq mi)	Length (mi)	Lc (mi)	ΔH (ft)	S (ft/mi)	n	Lag * (hrs)	Soil Group	Curve Number
A	Mohave	A10	2.40	4.10	2.00	300	73	.03	.55	B	68
A	Channel	A20	2.00	2.30	1.10	100	43	.03	.39	B/C	71
A		A30	1.40	2.90	1.10	180	62	.03	.40	B/C	71
A		A40	3.00	4.60	1.90	320	70	.03	.57	B	68
A		A50	.50	1.40	.60	80	57	.03	.24	C	79
A		A60	2.10	2.10	.80	100	48	.04	.44	B/C	74
A		A70	2.40	2.70	1.30	140	52	.04	.57	B/C	74
A		A80	1.40	2.30	1.30	160	70	.04	.51	B/C	74
A		A90	4.00	3.60	1.30	1020	283	.04	.46	B	72
A		A100	1.30	1.75	.90	210	120	.05	.45	D/B	86
		A110	.90	1.40	.70	200	110	.04	.30	D/B	86
A	Line Ad	Ad10	1.50	3.90	2.40	310	79	.03	.57	B	68
A		Ad20	2.50	4.00	2.00	480	120	.04	.66	B	74
A		Ad30	1.80	3.20	1.80	480	150	.04	.56	B	74
A		Ad40	2.70	3.90	1.60	2000	513	.05	.57	D	89
A		Ad50	3.90	3.60	1.80	2160	600	.05	.56	D	89
A		Ad60	.90	1.20	.60	980	817	.05	.23	D	89
A	Line Ae	Ae10	1.50	2.00	1.10	90	45	.03	.37	B/C	71
A		Ae20	3.20	4.40	2.30	340	77	.03	.59	B	68
A		Ae30	5.60	3.60	2.00	400	111	.03	.49	B	74
A		Ae40	12.30	3.80	1.30	980	258	.04	.48	B	74
A		Ae50	5.70	2.80	1.20	450	161	.04	.45	B/D	84
A		Ae60	2.00	2.20	1.20	2320	1055	.05	.36	D	89
A	Line Af	Af10	1.90	3.30	1.70	130	39	.03	.54	B	68
A		Af20	1.10	3.10	1.20	370	119	.03	.37	B	74
A		Af30	13.10	7.10	3.80	730	103	.03	.81	B	68
A		Af40	10.20	3.50	2.80	2150	614	.05	.66	B/D	84
A		Af50	3.60	3.60	2.30	3160	878	.05	.58	D	89
A		Af60	5.50	4.80	2.00	2960	617	.05	.65	D	89
A	Line Ag	Ag10	2.60	4.20	2.10	330	79	.03	.56	B	68
A		Ag20	3.50	3.60	1.80	540	150	.04	.59	B	74
A		Ag30	3.40	2.50	1.50	1610	644	.05	.45	B/D	84
A		Ag40	2.50	3.50	1.90	1610	460	.05	.60	D	89
A	Line Ah	Ah10	1.50	2.30	1.10	80	35	.03	.41	B/C	71
A		Ah20	2.50	2.30	1.40	190	83	.05	.63	B	78
A	Line Ai	Ai10	.80	2.00	1.10	80	40	.03	.38	B/C	71
A		Ai20	.80	1.80	1.10	160	89	.03	.31	B	78
A	Line Aj	Aj10	.90	5.80	3.50	540	93	.03	.75	B	68
A		Aj20	1.80	2.40	1.20	960	400	.05	.45	B	79
A	Line Ak	Ak10	2.10	3.30	1.20	210	64	.03	.43	B	68
A		Ak20	1.50	2.60	1.30	280	108	.03	.37	B	74

SCS Lag = $0.78\ (24\ n\ (LLc/S^{.5})^{.38})$

Table A1 Subbasin Hydrology Data

Basin	Channel	Sub Basin	Area (sq mi)	Length (mi)	Lc (mi)	^H (ft)	S (ft/mi)	n	SCS Lag (hrs)	Soil Group	Curve Number
A	Line Am	Am10	1.50	2.30	1.40	120	52	.04	.55	B/C	71
A	Line An	An10	3.90	3.90	1.80	780	200	.05	.72	B	85
A		An20	2.20	2.40	.90	1410	588	.05	.37	D/B	88
A	Line Ao	Ao10	.30	1.10	.60	80	73	.03	.21	C	85
A		Ao20	1.70	2.40	1.20	910	379	.05	.45	C/B	83
A		Ao30	3.10	3.90	1.90	1390	356	.05	.66	D/B	86
A	Line Ap	Ap10	.40	1.80	.90	210	117	.05	.30	D/B	86
B	B	B10	.90	1.80	1.30	270	150	.05	.50	D	91
B		B20	1.00	2.50	1.70	300	120	.05	.65	D	91
B	Line Ba	Ba10	.50	2.00	.90	380	190	.05	.43	D	88
B	Line Bb	Bb10	1.10	1.80	.90	210	117	.05	.46	D	86
B		Bb20	1.40	1.50	.40	200	133	.05	.30	D	93
B		Bb30	.90	1.20	.60	230	192	.05	.30	D	91
B		Bb40	.30	1.10	.50	150	136	.05	.29	D	88
B		Bb50	1.80	2.80	1.50	330	118	.05	.65	D	88
B	Line Bc	Bc10	.30	.80	.40	250	313	.05	.20	D	89
B	Line Bd	Bd10	.90	1.80	1.30	360	200	.05	.47	D	92
B		Bd20	1.80	2.00	1.00	300	150	.05	.47	D	88
B	Line Be	Be10	.80	1.80	.70	385	214	.05	.37	D	90
B		Be20	2.10	2.70	1.60	980	363	.05	.53	D	89
B	Line Bf	Bf10	1.40	2.00	1.00	660	330	.05	.40	D	89
B		Bf20	5.10	3.80	2.00	1420	374	.05	.66	D	89
C	Line Cb	Cb10	1.80	3.90	2.40	370	95	.03	.55	B	68
C		Cb20	4.90	5.20	2.70	800	154	.04	.78	B	74
C		Cb30	1.50	3.60	1.70	1080	300	.05	.63	B/D	84
C	Line Cc	Cc10	3.00	5.20	2.10	600	115	.03	.57	B	68
C		Cc20	3.10	4.50	1.70	2040	453	.05	.63	D/B	86
C	Line Cd	Cd10	2.60	3.30	1.30	260	79	.03	.43	B	68
C		Cd20	1.60	2.50	1.30	510	204	.04	.43	B/C	78
C		Cd30	4.70	4.50	2.70	2070	460	.05	.75	C	86
C	Line Ce	Ce10	1.00	1.70	.60	140	82	.03	.24	B	68
C		Ce20	1.80	3.80	1.40	680	179	.04	.53	C	83
C	Line Cf	Cf10	2.60	4.50	1.90	760	169	.04	.64	B/D/C	80
C	Line Cg	Cg10	2.40	4.60	1.70	700	152	.04	.63	C/B	79

SCS Lag = $0.78\ (24\ n\ (LLc/S^{.5})^{.38})$

Table A2 Channel Routing Data

Basin	Channel	U/S NODE	D/S NODE	L (ft)	S (ft/ft)	n	W (ft)	Z
A	Mohave	90	80	8400	.0071	.03	100	2
A	Channel	80	70	8800	.004	.03	100	2
A		70	60	4800	.0063	.03	150	2
A		60	50	5600	.0036	.03	150	2
A		50	40	5600	.0036	.03	250	2
A		40	30	8000	.0031	.03	300	2
A		30	20	7600	.0033	.03	350	2
A		20	10	8400	.003	.03	400	2
A	Line Ad	Ad6	Ad4	2400	.01	.03	75	2
A		Ad5	Ad4	4800	.0083	.03	75	2
A		Ad4	Ad3	16000	.01	.03	75	2
A		Ad3	Ad2	4800	.0073	.03	75	2
A		Ad2	20	18400	.01	.03	100	2
A	Line Ae	Ae6	Ae5	12000	.0383	.05	50	0
A		Ae5	Ae4	14800	.0203	.04	100	0
A		Ae4	Ae3	18400	.0155	.03	200	0
A		Ae3	Ae2	23600	.0142	.03	300	0
A		Ae2	20	9600	.0094	.03	150	2
A	Line Af	Af5	Af4	10800	.0407	.05	100	0
A		Af4	Af3	26000	.0265	.04	200	0
A		Af3	Af2	10400	.013	.03	150	2
A		Af2	30	6800	.0088	.03	150	2
A	Line Ag	Ag4	Ag3	2400	.0083	.03	75	2
A		Ag3	Ag2	13600	.01	.03	75	2
A		Ag2	30	18800	.01	.03	75	2
A	Line Ah	Ah2	30	6000	.0088	.03	50	0
A	Line Ai	Ai2	40	7000	.0086	.03	50	0
A	Line Aj	Aj2	40	19600	.01	.03	75	2
A	Line Ak	Ak2	50	9600	.0078	.03	75	2
A	Line An	An2	60	20400	.0105	.03	50	2
A	Line Ao	Ao2	80	6400	.01	.03	75	2
B	B	220	210	13000	.01	.05	160	3
B		210	200	4800	.0104	.05	160	2
B	Line Bb	Bb5	Bb4	1600	.0144	.05	160	5
B		Bb4	Bb3	4800	.0104	.05	160	5
B		Bb3	Bb2	3200	.0078	.05	200	5
B		Bb2	Bb1	7700	.0078	.05	240	5

Table A2 Channel Routing Data

Basin	Channel	U/S NODE	D/S NODE	L (ft)	S (ft/ft)	n	W (ft)	Z
B	Line Bc	Bc2	Bb2	6000	.014	.05	130	5
B	Line Bd	Bd2	140	8000	.0085	.05	320	5
B	Line Be	Be2	140	5600	.0232	.05	150	5
B	Line Bf	Bf2	150	7200	.0306	.05	100	5
C	Railway	140	130	2500	.01	.03	50	2
C	Channel	130	120	7200	.0069	.03	75	2
C		120	110	5200	.0058	.03	75	2
C		110	100	6100	.0082	.03	90	2
C	Line Cc	Cc2	100	20400	.0164	.03	100	0
C	Line Cd	Cd2	110	14400	.0153	.03	75	2
C		Cd3	Ca2	3200	.0109	.03	50	2
C	Line Ce	Ce2	120	11200	.0125	.03	75	0

Table A3 Design Discharges Adjusted for Area

Basin	Channel	Drain	Area (sq mi)	ARF	Flow 80% 2 Yr (cfs)	Flow 80% 10 Yr (cfs)	Flow 80% 100 Yr (cfs)	Flow 100% 2 Yr (cfs)	Flow 100% 10 Yr (cfs)	Flow 100% 100 Yr (cfs)	Adjusted Flow * 2 Yr (cfs)	Adjusted Flow * 10 Yr (cfs)	Adjusted Flow * 100 Yr (cfs)
A	Mohave	10 - 20	167.67	.81	557	12,416	44,645	4,057	24,118	72,892	1,384	13,001	46,057
A	Channel	20 - 30	118.27	.83	1,008	10,586	34,318	3,514	19,502	53,805	1,384	11,923	37,241
A		30 - 40	63.87	.88	490	5,434	18,564	1,751	10,338	29,186	1,204	7,396	22,813
A		40 - 50	58.83	.89	693	5,516	18,093	1,829	10,201	28,233	1,204	7,624	22,656
A		50 - 60	22.13	.94	436	3,217	8,850	1,114	5,456	13,221	911	4,784	11,910
A		60 - 70	15.50	.96	318	2,197	5,950	787	3,652	8,967	693	3,361	8,364
A		70 - 80	11.70	.97	332	1,958	4,932	779	3,133	7,258	712	2,957	6,909
A		80 - 90	2.60	.99	157	702	1,536	328	1,073	2,176	319	1,054	2,144
A	Line Ad	20 - Ad2	11.80	.97	382	1,971	5,027	834	3,153	7,314	1,074	2,976	6,971
A		Ad2 - Ad3	9.30	.97	623	2,140	4,775	1,114	3,223	6,655	1,074	3,061	6,373
A		Ad3 - Ad4	7.50	.98	632	2,031	4,295	1,123	2,982	5,881	1,074	2,887	5,722
A		Ad4 - Ad5	3.90	.98	431	1,190	2,390	688	1,688	3,222	662	1,638	3,139
A		Ad4 - Ad6	.90	1.00	148	385	758	231	537	1,018	231	537	1,018
A	Line Ae	20 - Ae2	28.80	.93		1,335	6,563	2	3,161	11,845	757	3,365	9,996
A		Ae2 - Ae3	25.60	.94		1,388	6,460	213	3,198	11,377	757	3,365	9,902
A		Ae3 - Ae4	20.00	.95	179	1,997	6,902	578	3,821	10,851	757	3,365	9,864
A		Ae4 - Ae5	7.70	.98	365	1,673	3,979	800	2,632	5,638	757	2,536	5,472
A		Ae5 - Ae6	2.00	1.00	225	678	1,410	390	984	1,903	390	984	1,903
A	Line Af	30 - Af2	35.40	.92	685	3,934	11,015	1,508	6,592	16,660	1,414	5,547	14,402
A		Af2 - Af3	33.50	.92	705	3,991	10,895	1,552	6,585	16,346	1,414	5,547	14,166
A		Af3 - Af6	1.10	1.00	5	118	397	32	226	622	32	226	622
A	Line Ag	30 - Ag2	9.40	.97	200	1,358	3,735	495	2,349	5,599	657	2,200	5,319
A		Ag2 - Ag3	5.90	.98	351	1,424	3,140	691	2,096	4,397	657	2,029	4,271
A		Ag3 - Ag4	2.50	.99	274	740	1,489	430	1,055	2,009	422	1,039	1,983
A	Line Ah	30 - Ah2	2.50	.99	28	289	853	101	512	1,292	97	501	1,270

* Adjusted Flow is interpolated between 80% and 100%. Flows were not decreased in successive downstream reaches.

Table A3 Design Discharges Adjusted for Area

Basin	Channel	Drain	Area (sq mi)	ARF	Flow 80%** 2 Yr (cfs)	Flow 80%** 10 Yr (cfs)	Flow 80%** 100 Yr (cfs)	Flow 100% 2 Yr (cfs)	Flow 100% 10 Yr (cfs)	Flow 100% 100 Yr (cfs)	Adjusted Flow* 2 Yr (cfs)	Adjusted Flow* 10 Yr (cfs)	Adjusted Flow* 100 Yr (cfs)
A	Line Ai	40 - Ai2	.80	1.00	7	136	432	32	278	676	32	278	676
A	Line Aj	40 - Aj2	1.02	1.00		58	237	15	134	422	15	134	422
A	Line Ak	50 - Ak2	1.50	1.00		72	382	11	167	697	11	167	697
A	Line Am	60 - Am2	1.50	1.00		84	362	14	187	601	14	187	601
A	Line An	70 -8474	3.65	.99	96	331	740	170	449	1,035	402	1,283	2,853
A		8474- An2	2.20	1.00	137	526	1,292	236	840	1,833	236	840	1,833
A	Line Ao	80 - Ao2	4.80	.98	294	1,046	2,358	525	1,592	3,331	502	1,537	3,234
A		Ao2 - Ao3	3.10	.99	219	712	1,555	379	1,057	2,163	371	1,040	2,133
A	Line Ap	Ap1 - Ap2	.40	1.00	38	134	275	69	189	379	69	189	379
B		- 200	12.50	.97	1,377	4,047	8,344	1,720	4,687	9,432	1,591	4,447	9,024
B		200 - 210	10.29	.97	1,184	3,348	6,876	1,457	3,884	7,761	1,355	3,683	7,429
B		210 - 220	6.50	.98	773	2,101	4,280	945	2,422	4,819	902	2,342	4,684
B	Line Bb	200 - Bb2	1.20	1.00	165	515	1,055	207	590	1,113	207	590	1,113
B		Bb2 - Bb3	.76	1.00	106	291	584	127	332	658	127	332	658
B		Bb3 - Bb4	.53	1.00	83	222	431	100	247	482	100	247	482
B		Bb4 - Bb5	.45	1.00	74	189	371	87	215	415	87	215	415
B	Line Bc	Bb2 - Bc2	.08	1.00	13	40	78	25	58	106	25	58	106
B	Line Bd	210 - Bd2	.44	1.00	52	166	368	67	195	415	67	195	415
B	Line Be	210 - Be2	2.10	1.00	294	808	1,547	355	923	1,736	355	923	1,736
B	Line Bf	220 - Bf2	5.10	.98	708	1,802	3,514	808	2,004	3,871	783	1,954	3,782

* Adjusted Flow is interpolated between 80% (92% for Basin B) and 100%. Flows were not decreased in successive downstream reaches.

** 92% for Basin B

Table A3 Design Discharges Adjusted for Area

Basin	Channel	Drain	Area	ARF	Flow 80%			Flow 100%			Adjusted Flow*		
					2 Yr	10 Yr	100 Yr	2 Yr	10 Yr	100 Yr	2 Yr	10 Yr	100 Yr
			(sq mi)		(cfs)	(cfs)	(cfs)	(cfs)	(cfs)	(cfs)	(cfs)	(cfs)	(cfs)
C	Railway	50 - 100	31.00	.93	346	2,752	8,867	930	5,021	13,791	743	4,227	12,068
C	Drain	100 - 110	16.70	.95	351	2,070	3,519	873	3,519	8,582	743	3,157	7,316
C		110 - 120	7.80	.98	136	979	2,745	383	1,685	4,117	358	1,614	3,980
C		120 - 130	5.00	.98	116	690	1,863	281	1,159	2,765	265	1,112	2,675
C		130 - 140	2.40	.99	50	319	876	126	539	1,311	122	528	1,289
C		140 - 150	1.00	1.00							30	120	300
C	Line Cb	Cc1 - Cb2	4.90	.98	9	310	1,149	73	630	1,852	67	598	1,782
C	Line Cc	100 - Cc1	9.50	.97	119	1,044	3,168	261	1,655	4,506	240	1,563	4,305
C		Cb2 - Cc2	3.10	.99	96	540	1,424	221	902	1,988	215	884	1,960
C	Line Cd	110 - Cd2	6.30	.98	240	1,073	2,624	504	1,702	3,772	503	1,639	3,657
C		Cd2 - Cd3	4.70	.98	303	997	2,191	525	1,488	3,046	503	1,439	2,961
C	Line Ce	120 - Ce2	1.80	1.00	68	347	858	159	556	1,235	159	556	1,235
C	Line Cf	130 - Cf2	2.60	.99	67	376	991	157	621	1,468	153	609	1,444
C	Line Cg	140 - Cg2	2.40	.99	50	319	876	126	539	1,311	122	528	1,289

* Adjusted Flow is interpolated between 80% and 100%. Flows were not decreased in successive downstream reaches.

HEC-1 INPUT BASIN A and C - 100%

```
ID        Kingman Master Drainage Plan
ID        City of Kingman, Arizona
ID        Project No. PH-K01-100-01
ID        Input File:  A18-0074.HEC   Output File:  A18-0075.HEC
ID  ******************************************************************************
ID        Basin A and C
ID        3-Hr Storm:  2, 10 & 100 Yrs
ID  ******************************************************************************
IT  5.                    60.
IN  5.
IO  5.
JR  3.    0.37    0.63    1.0

KK  Ap10  SubBasin Ap10 Runoff
BA  0.40
PB  2.83
PI  1.3   1.3     1.1     1.5     1.5     1.8     1.5     1.8     1.8     1.5
PI  1.6   1.8     2.2     2.2     2.2     2.0     2.6     2.7     2.4     2.7
PI  3.3   3.1     2.9     3.0     3.1     4.2     5.0     3.5     6.8     7.3
PI  8.2   5.9     2.0     1.8     1.8     0.6
LS  0.    86.     0.
UD  0.30

KK  Ap1   Ap2---Ap1
KM        Route flows from Ap2 to Ap1
RK  3000. 0.0100  0.03                    75.     2.

KK  A110  SubBasin A110 Runoff
BA  0.90
LS  0.    86.     0.
UD  0.30

KK  Ap1
KM        Combine flows at Ap1
HC  2.

KK  90    Ap1--90
KM        Route flows from Ap1 to 90
RK  300.  0.0071  0.02                    30.     2.

KK  A100  SubBasin A100 Runoff
BA  1.30
LS  0.    86.     0.
UD  0.45

KK  90
KM        Combine flows at 90
HC  2.

KK  80    90---80
KM        Route flows from 90 to 80
RK  8400. 0.0071  0.03                    100.    2.

KK  Ao20  SubBasin Ao20 Runoff
BA  1.70
LS  0.    83.     0.
UD  0.45

KK  Ao30  SubBasin Ao30 Runoff
BA  3.10
LS  0.    86.     0.
UD  0.66

KK  Ao2
KM        Combine flows at Ao2
HC  2.

KK  80    Ao2---80
KM        Route flows from Ao2 to 80
RK  6400. 0.0100  0.03                    75.     2.
```

```
59          KK  Ao10  SubBasin Ao10 Runoff
60          BA  0.30
61          LS  0.    85.     0.
62          UD  0.21

63          KK  A90   SubBasin A90 Runoff
64          BA  4.00
65          LS  0.    72.     0.
66          UD  0.46

67          KK  80
68          KM        Combine flows at 80
69          HC  4.

70          KK  70    80---70
71          KM        Route flows from 80 to 70
72          RK  8800. 0.0040  0.03                  100.    2.

73          KK  A80   SubBasin A80 Runoff
74          BA  1.40
75          LS  0.    74.     0.
76          UD  0.51

77          KK  A70   SubBasin A70 Runoff
78          BA  2.40
79          LS  0.    74.     0.
80          UD  0.57

81          KK  70
82          KM        Combine flows at 70
83          HC  3.
84          KK  60    70---60
85          KM        Route flows from 70 to 60
86          RK  4800. 0.0063  0.03                  150.    2.

87          KK  An20  SubBasin An20 Runoff
88          BA  2.20
89          LS  0.    88.     0.
90          UD  0.37

91          KK  60    An2---60
92          KM        Route flows from An2 to 60
93          RK  20400.0.0105  0.03                  50.     2.

94          KK  An10  SubBasin An10 Runoff
95          BA  2.93
96          LS  0.    85.     0.
97          UD  0.60

98          KK  Am10  SubBasin Am10 Runoff
99          BA  1.50
100         LS  0.    71.     0.
101         UD  0.55

102         KK  60
103         KM        Combine flows at 60
104         HC  4.

105         KK  50    60---50
106         KM        Route flows from 60 to 50
107         RK  5600. 0.0036  0.03                  150.    2.

108         KK  Ak20  SubBasin Ak20 Runoff
109         BA  1.50
110         LS  0.    74.     0.
111         UD  0.37

112         KK  50    Ak2---50
113         KM        Route flows from Ak2 to 50
114         RK  9600. 0.0078  0.03                  150.    2.
```

```
115          KK  Ak10  SubBasin Ak10 Runoff
116          BA  2.10
117          LS  0.    68.     0.
118          UD  0.43

119          KK  A60   SubBasin A60 Runoff
120          BA  2.10
121          LS  0.    74.     0.
122          UD  0.44
123          KK  50a
124          KM       Combine Drain A half of flows at 50
125          HC  4.

126          KK  Cg10  SubBasin Cg10 Runoff
127          BA  2.40
128          LS  0.    79.     0.
129          UD  0.63

130          KK  130   140---130
131          KM       Route flows from 140 to 130
132          RK  2500. 0.01    0.03                    50.     2.

133          KK  Cf10  SubBasin Cf10 Runoff
134          BA  2.60
135          LS  0.    80.     0.
136          UD  0.64

137          KK  130
138          KM       Combine flows at 130
139          HC  2.

140          KK  120   130---120
141          KM       Route flows from 130 to 120
142          RK  7200. 0.0069  0.03                    75.     2.

143          KK  Ce20  SubBasin Ce20 Runoff
144          BA  1.80
145          LS  0.    83.     0.
146          UD  0.53

147          KK  120   Ce2---120
148          KM       Route flows from Ce2 to 120
149          RK  8000. 0.0175  0.03                    75.     0.

150          KK  Ce10  SubBasin Ce10 Runoff
151          BA  1.0
152          LS  0.    68.     0.
153          UD  0.24

154          KK  120
155          KM       Combine flows at 120
156          HC  3.

157          KK  110   120---110
158          KM       Route flows from 120 to 110
159          RK  5200. 0.0053  0.03                    75.     2.

160          KK  Cd30  SubBasin Cd30 Runoff
161          BA  4.70
162          LS  0.    86.     0.
163          UD  0.75
164          KK  Cd2   Cd3---Cd2
165          KM       Route flows from Cd3 to Cd2
166          RK  3200. 0.0109  0.03                    50.     2.

167          KK  Cd20  SubBasin Cd20 Runoff
168          BA  1.60
169          LS  0.    78.     0.
170          UD  0.43
```

```
171          KK  Cd2
172          KM        Combine flows at Cd2
173          HC  2.

174          KK  110   Cd2---110
175          KM        Route flows from Cd2 to 110
176          RK  14400.0.0153  0.03                    75.     2.

177          KK  Cd10  SubBasin Cd10 Runoff
178          BA  2.60
179          LS  0.    68.     0.
180          UD  0.43

181          KK  110
182          KM        Combine flows at 110
183          HC  3.

184          KK  100   110---100
185          KM        Route flows from 110 to 100
186          RK  6100. 0.0082  0.03                    90.     2.

187          KK  Cc20  SubBasin Cc20 Runoff
188          BA  3.10
189          LS  0.    86.     0.
190          UD  0.63

191          KK  Cc1   Cc2---Cc1
192          KM        Route flows from Cc2 to 100
193          RK  20400.0.0164  0.03                    100.    0.

194          KK  Cb20  SubBasin Cb20 Runoff
195          BA  4.90
196          LS  0.    74.     0.
197          UD  0.78

198          KK  Cc1   Cb2---Cc1
199          KM        Route flows from Cb2 to Cb1
200          RK  5600. 0.0107  0.03                    75.     2.

201          KK  Cb30  SubBasin Cb30 Runoff
202          BA  1.50
203          LS  0.    84.     0.
204          UD  0.63

205          KK  Cc1
206          KM        Combine flows at Cc1
207          HC  3.

208          KK  100   Cc1---100
209          KM        Route flows from Cb1 to 100
210          RK  20000.0.0188  0.03                    100.    0.

211          KK  Cc10  SubBasin Cc10 Runoff
212          BA  3.00
213          LS  0.    68.     0.
214          UD  0.57

215          KK  Cb10  SubBasin Cb10 Runoff
216          BA  1.80
217          LS  0.    68.     0.
218          UD  0.55

219          KK  100
220          KM        Combine flows at 100
221          HC  4.

222          KK  50    100---50
223          KM        Route flows from 100 to 50
224          RK  6400. 0.0063  0.03                    150.    2.
```

```
225          KK  50
226          KM       Combine flows from Drain C and A at 50
227          HC  2.

228          KK  40   50---40
229          KM       Route flows from 50 to 40
230          RK  5600. 0.0036  0.03                  250.    2.

231          KK  Aj20  SubBasin Aj20 Runoff
232          BA  1.02
233          LS  0.    79.     0.
234          UD  0.45

235          KK  40   Aj2---40
236          KM       Route flows from Aj2 to 40
237          RK  19600.0.01    0.03                  75.     2.

238          KK  Aj10  SubBasin Aj10 Runoff
239          BA  1.92
240          LS  0.    68.     0.
241          UD  0.74

242          KK  Ai20  SubBasin Ai20 Runoff
243          BA  0.80
244          LS  0.    78.     0.
245          UD  0.12

246          KK  40   Ai2---40
247          KM       Route flows from Ai2 to 40
248          RK  7000. 0.0086  0.03                  50.     0.

249          KK  Ai10  SubBasin Ai10 Runoff
250          BA  0.80
251          LS  0.    71.     0.
252          UD  0.31

253          KK  A50   SubBasin A50 Runoff
254          BA  0.50
255          LS  0.    79.     0.
256          UD  0.24

257          KK  40a
258          KM       Combine half of flows at 40
259          HC  4.

260          KK  40
261          KM        Combine remainder of flows at 40
262          HC  3.

263          KK  30   40---30
264          KM       Route flows from 40 to 30
265          RK  6300. 0.0039  0.03                  300.    2.

266          KK  Ah20  SubBasin Ah20 Runoff
267          BA  2.50
268          LS  0.    78.     0.
269          UD  0.63

270          KK  30   Ah2---30
271          KM       Route flows from Ah2 to 30
272          RK  6000. 0.0088  0.03                  50.     0.

273          KK  Ah10  SubBasin Ah10 Runoff
274          BA  1.50
275          LS  0.    71.     0.
276          UD  0.41

277          KK  30a
278          KM       Combine 1st part of flows at 30
279          HC  3.
```

```
KK  A40   SubBasin A40 Runoff
BA  3.00
LS  0.    68.     0.
UD  0.57

KK  30b
KM        Combine 2nd part of flows at 30
HC  2.

KK  Ag40  SubBasin Ag40 Runoff
BA  2.50
LS  0.    89.     0.
UD  0.60

KK  Ag3   Ag4---Ag3
KM        Route flows from Ag4 to Ag3
RK  2400. 0.0083  0.03                  75.     2.

KK  Ag30  SubBasin Ag30 Runoff
BA  3.40
LS  0.    84.     0.
UD  0.45

KK  Ag3
KM        Combine flows at Ag3
HC  2.

KK  Ag2   Ag3---Ag2
KM        Route flows from Ag3 to Ag2
RK  13600.0.01    0.03                  75.     2.

KK  Ag20  SubBasin Ag20 Runoff
BA  3.50
LS  0.    74.     0.
UD  0.59

KK  Ag2
KM        Combine flows at Ag2
HC  2.

KK  30    Ag2---30
KM        Route flows from Ag2 to 30
RK  18800.0.01    0.03                  75.     2.

KK  Ag10  SubBasin Ag10
BA  2.60
LS  0.    68.     0.
UD  0.56

KK  30c
KM        Combine 3rd part of flows at 30
HC  3.

KK  Af60  SubBasin Af60 Runoff
BA  5.50
LS  0.    89.     0.
UD  0.65

KK  Af50  SubBasin Af50 Runoff
BA  3.60
LS  0.    89.     0.
UD  0.58

KK  Af5
KM        Combine flows at Af5
HC  2.

KK  Af4   Af5---Af4
KM        Route flows from Af5 to Af4
RK  10800.0.0407  0.05                  100.    0.
```

```
335          KK  Af40  SubBasin Af40 Runoff
336          BA  10.20
337          LS  0.    84.     0.
338          UD  0.66

339          KK  Af4
340          KM        Combine flows at Af4
341          HC  2.

342          KK  Af3   Af4---Af3
343          KM        Route flows from Af4 to Af3
344          RK  26000.0.0265  0.04                    200.    0.

345          KK  Af30  SubBasin Af30 Runoff
346          BA  13.10
347          LS  0.    68.     0.
348          UD  0.81

349          KK  Af20  SubBasin Af20 Runoff
350          BA  1.10
351          LS  0.    74.     0.
352          UD  0.37

353          KK  Af3
354          KM        Combine flows at Af3
355          HC  3.

356          KK  Af2   Af3---Af2
357          KM        Route flows from Af3 to Af2
358          RK  10400.0.013   0.03                    150.    2.

359          KK  Af10  SubBasin Af10 Runoff
360          BA  1.90
361          LS  0.    68.     0.
362          UD  0.54

363          KK  Af2
364          KM        Combine Flows at Af2
365          HC  2.

366          KK  30    Af2---30
367          KM        Route flows from Af2 to 30
368          RK  6800. 0.0088  0.03                    150.    2.

369          KK  30
370          KM        Combine remainder of flows at 30
371          HC  2.

372          KK  20    30---20
373          KM        Route flows from 30 to 20
374          RK  6000. 0.0042  0.03                    350.    2.

375          KK  Ae60  SubBasin Ae60 Runoff
376          BA  2.00
377          LS  0.    89.     0.
378          UD  0.36

379          KK  Ae5   Ae6---Ae5
380          KM        Route flows from Ae6 to Ae5
381          RK  12000.0.0383  0.05                    50.     0.

382          KK  Ae50  SubBasin Ae50 Runoff
383          BA  5.70
384          LS  0.    84.     0.
385          UD  0.58

386          KK  Ae5
387          KM        Combine flows at Ae5
388          HC  2.
```

```
389          KK  Ae4   Ae5---Ae4
390          KM        Route flows from Ae5 to Ae4
391          RK  14800.0.0203  0.04                    100.    0.

392          KK  Ae40  SubBasin Ae40 Runoff
393          BA  12.30
394          LS  0.    74.     0.
395          UD  0.48

396          KK  Ae4
397          KM        Combine flows at Ae4
398          HC  2.

399          KK  Ae3   Ae4---Ae3
400          KM        Route flows from Ae4 to Ae3
401          RK  19500.0.0146  0.03                    200.    0.

402          KK  Ae30  SubBasin Ae30 Runoff
403          BA  5.60
404          LS  0.    74.     0.
405          UD  0.49

406          KK  Ae3
407          KM        Combine flows at Ae3
408          HC  2.

409          KK  Ae2   Ae3---Ae2
410          KM        Route flows from Ae3 to Ae2
411          RK  23600.0.0142  0.03                    300.    0.

412          KK  Ae20  SubBasin Ae20 Runoff
413          BA  3.20
414          LS  0.    68.     0.
415          UD  0.59

416          KK  Ae2
417          KM     Combine flows at Ae2
418          HC  2.

419          KK  20    Ae2---20
420          KM        Route flows from Ae2 to 20
421          RK  9600. 0.0094  0.03                    150.    2.

422          KK  Ae10  SubBasin Ae10 Runoff
423          BA  1.50
424          LS  0.    71.     0.
425          UD  0.37

426          KK  20a
427          KM        Combine 1st part of flows at 20
428          HC  3.

429          KK  Ad60  SubBasin Ad60 Runoff
430          BA  0.90
431          LS  0.    89.     0.
432          UD  0.23

433          KK  Ad4   Ad6---Ad4
434          KM        Route flows from Ad6 to Ad4
435          RK  2400. 0.01    0.03                    75.     2.

436          KK  Ad50  SubBasin Ad50 Runoff
437          BA  3.90
438          LS  0.    89.     0.
439          UD  0.56

440          KK  Ad4   Ad5---Ad4
441          KM        Route flows from Ad5 to Ad4
442          RK  4800. 0.0083  0.03                    75.     2.
```

```
440          KK  Ad4   Ad5---Ad4
441          KM        Route flows from Ad5 to Ad4
442          RK  4800. 0.0083  0.03                  75.     2.

443          KK  Ad40  SubBasin Ad40 Runoff
444          BA  2.70
445          LS  0.    89.     0.
446          UD  0.57

447          KK  Ad4
448          KM        Combine flows at Ad4
449          HC  3.

450          KK  Ad3   Ad4---Ad3
451          KM        Route flows from Ad4 to Ad3
452          RK  16000.0.01    0.03                  75.     2.

453          KK  Ad30  SubBasin Ad30 Runoff
454          BA  1.80
455          LS  0.    74.     0.
456          UD  0.56

457          KK  Ad3
458          KM        Combine flows at Ad3
459          HC  2.

460          KK  Ad2   Ad3---Ad2
461          KM        Route flows from Ad3 to Ad2
462          RK  4800. 0.0073  0.03                  75.     2.

463          KK  Ad20  SubBasin Ad20 Runoff
464          BA  2.50
465          LS  0.    74.     0.
466          UD  0.66

467          KK  Ad2
468          KM        Combine flows at Ad2
469          HC  2.

470          KK  20    Ad2---20
471          KM        Route flows from Ad2 to 20
472          RK  18400.0.01    0.03                  100.    2.

473          KK  Ad10  SubBasin Ad10 Runoff
474          BA  1.50
475          LS  0.    68.     0.
476          UD  0.57

477          KK  20b
478          KM        Combine 2nd part of flows at 20
479          HC  3.

480          KK  A30   SubBasin A30 Runoff
481          BA  1.40
482          LS  0.    71.     0.
483          UD  0.40

484          KK  20
485          KM        Combine remainder of flows at 20
486          HC  2.

487          KK  10    20---10
488          KM        Route flows from 20 to 10
489          RK  6200. 0.0030  0.03                  400.    2.

490          KK  A20   SubBasin A20 Runoff
491          BA  2.00
492          LS  0.    71.     0.
493          UD  0.39
```

```
494          KK  A10   SubBasin A10 Runoff
495          BA  2.40
496          LS  0.    68.     0.
497          UD  0.55

498          KK  10
499          KM        Combine flows at 10
500          HC  3.
501          ZZ
```

HEC-1 OUTPUT BASIN A and C 100%

Kingman Master Drainage Plan
City of Kingman, Arizona
Project No. PH-K01-100-01
Input File: A18-0074.HEC Output File: A18-0075.HEC

****

Basin A and C
3-Hr Storm: 2, 10 & 100 Yrs

****

PEAK FLOW AND STAGE (END-OF-PERIOD) SUMMARY FOR MULTIPLE PLAN-RATIO ECONOMIC COMPUTATIONS
FLOWS IN CUBIC FEET PER SECOND, AREA IN SQUARE MILES
TIME TO PEAK IN HOURS

OPERATION	STATION	AREA	PLAN		RATIOS APPLIED TO PRECIPITATION RATIO 1 .37	RATIO 2 .63	RATIO 3 1.00
HYDROGRAPH AT							
+	Ap10	.40	1	FLOW	73.	196.	387.
				TIME	2.83	2.83	2.83
ROUTED TO							
+	Ap1	.40	1	FLOW	69.	189.	379.
				TIME	3.00	2.92	2.83
HYDROGRAPH AT							
+	A110	.90	1	FLOW	165.	440.	871.
				TIME	2.83	2.83	2.83
2 COMBINED AT							
+	Ap1	1.30	1	FLOW	225.	621.	1250.
				TIME	2.83	2.83	2.83
ROUTED TO							
+	90	1.30	1	FLOW	225.	618.	1247.
				TIME	2.92	2.83	2.83
HYDROGRAPH AT							
+	A100	1.30	1	FLOW	197.	538.	1084.
				TIME	3.00	2.92	2.92
2 COMBINED AT							
+	90	2.60	1	FLOW	419.	1135.	2292.
				TIME	2.92	2.92	2.83
ROUTED TO							
+	80	2.60	1	FLOW	328.	1073.	2176.
				TIME	3.25	3.08	3.00
HYDROGRAPH AT							
+	Ao20	1.70	1	FLOW	188.	592.	1279.
				TIME	3.00	2.92	2.92
HYDROGRAPH AT							
+	Ao30	3.10	1	FLOW	379.	1057.	2163.
				TIME	3.17	3.17	3.08
2 COMBINED AT							
+	Ao2	4.80	1	FLOW	552.	1611.	3363.
				TIME	3.08	3.08	3.00
ROUTED TO							
+	80	4.80	1	FLOW	525.	1592.	3331.
				TIME	3.25	3.17	3.08

HEC-1 OUTPUT BASIN A and C 100%

HYDROGRAPH AT							
+	Ao10	.30	1	FLOW	57.	157.	315.
				TIME	2.75	2.75	2.75
HYDROGRAPH AT							
+	A90	4.00	1	FLOW	59.	613.	1855.
				TIME	3.17	3.00	3.00
4 COMBINED AT							
+	80	11.70	1	FLOW	919.	3313.	7434.
				TIME	3.25	3.08	3.00
ROUTED TO							
+	70	11.70	1	FLOW	779.	3133.	7258.
				TIME	3.58	3.25	3.17
HYDROGRAPH AT							
+	A80	1.40	1	FLOW	33.	241.	683.
				TIME	3.17	3.08	3.00
HYDROGRAPH AT							
+	A70	2.40	1	FLOW	52.	388.	1103.
				TIME	3.25	3.08	3.08
3 COMBINED AT							
+	70	15.50	1	FLOW	828.	3707.	8996.
				TIME	3.58	3.25	3.08
ROUTED TO							
+	60	15.50	1	FLOW	787.	3652.	8967.
				TIME	3.75	3.33	3.17
HYDROGRAPH AT							
+	An20	2.20	1	FLOW	441.	1095.	2104.
				TIME	2.92	2.83	2.83
ROUTED TO							
+	60	2.20	1	FLOW	236.	840.	1833.
				TIME	3.50	3.25	3.08
HYDROGRAPH AT							
+	An10	2.93	1	FLOW	341.	998.	2070.
				TIME	3.08	3.08	3.08
HYDROGRAPH AT							
+	Am10	1.50	1	FLOW	14.	187.	601.
				TIME	3.25	3.08	3.08
4 COMBINED AT							
+	60	22.13	1	FLOW	1149.	5540.	13364.
				TIME	3.67	3.25	3.17
ROUTED TO							
+	50	22.13	1	FLOW	1114.	5456.	13221.
				TIME	3.83	3.33	3.17
HYDROGRAPH AT							
+	Ak20	1.50	1	FLOW	43.	309.	848.
				TIME	3.00	2.92	2.92
ROUTED TO							
+	50	1.50	1	FLOW	11.	167.	697.
				TIME	4.83	3.50	3.17
HYDROGRAPH AT							
+	Ak10	2.10	1	FLOW	5.	218.	805.
				TIME	3.25	3.00	2.92

HEC-1 OUTPUT BASIN A and C 100%

HYDROGRAPH AT							
+	A60	2.10	1	FLOW	55.	394.	1098.
				TIME	3.08	3.00	2.92
4 COMBINED AT							
+	50a	27.83	1	FLOW	1124.	5987.	15494.
				TIME	3.83	3.33	3.17
HYDROGRAPH AT							
+	Cg10	2.40	1	FLOW	126.	539.	1311.
				TIME	3.25	3.17	3.08
ROUTED TO							
+	130	2.40	1	FLOW	125.	537.	1302.
				TIME	3.33	3.17	3.17
HYDROGRAPH AT							
+	Cf10	2.60	1	FLOW	157.	621.	1468.
				TIME	3.25	3.17	3.08
2 COMBINED AT							
+	130	5.00	1	FLOW	281.	1159.	2765.
				TIME	3.25	3.17	3.08
ROUTED TO							
+	120	5.00	1	FLOW	242.	1116.	2730.
				TIME	3.58	3.33	3.25
HYDROGRAPH AT							
+	Ce20	1.80	1	FLOW	181.	580.	1259.
				TIME	3.08	3.00	3.00
ROUTED TO							
+	120	1.80	1	FLOW	159.	556.	1235.
				TIME	3.33	3.17	3.08
HYDROGRAPH AT							
+	Ce10	1.00	1	FLOW	3.	139.	496.
				TIME	3.08	2.83	2.75
3 COMBINED AT							
+	120	7.80	1	FLOW	383.	1685.	4117.
				TIME	3.50	3.25	3.17
ROUTED TO							
+	110	7.80	1	FLOW	366.	1660.	4074.
				TIME	3.67	3.33	3.25
HYDROGRAPH AT							
+	Cd30	4.70	1	FLOW	529.	1489.	3065.
				TIME	3.25	3.17	3.17
ROUTED TO							
+	Cd2	4.70	1	FLOW	525.	1488.	3046.
				TIME	3.33	3.25	3.25
HYDROGRAPH AT							
+	Cd20	1.60	1	FLOW	92.	412.	1013.
				TIME	3.00	2.92	2.92
2 COMBINED AT							
+	Cd2	6.30	1	FLOW	591.	1807.	3868.
				TIME	3.25	3.17	3.08
ROUTED TO							
+	110	6.30	1	FLOW	504.	1702.	3772.
				TIME	3.67	3.42	3.25

HEC-1 OUTPUT BASIN A and C 100%

HYDROGRAPH AT							
+	Cd10	2.60	1	FLOW	6.	270.	997.
				TIME	3.25	3.00	2.92
3 COMBINED AT							
+	110	16.70	1	FLOW	873.	3519.	8582.
				TIME	3.67	3.33	3.17
ROUTED TO							
+	100	16.70	1	FLOW	834.	3481.	8546.
				TIME	3.83	3.42	3.25
HYDROGRAPH AT							
+	Cc20	3.10	1	FLOW	389.	1088.	2218.
				TIME	3.17	3.08	3.08
ROUTED TO							
+	Cc1	3.10	1	FLOW	221.	902.	1988.
				TIME	3.83	3.50	3.33
HYDROGRAPH AT							
+	Cb20	4.90	1	FLOW	84.	642.	1868.
				TIME	3.42	3.33	3.25
ROUTED TO							
+	Cc1	4.90	1	FLOW	73.	630.	1852.
				TIME	3.75	3.42	3.33
HYDROGRAPH AT							
+	Cb30	1.50	1	FLOW	152.	468.	1000.
				TIME	3.17	3.08	3.08
3 COMBINED AT							
+	Cc1	9.50	1	FLOW	353.	1885.	4697.
				TIME	3.75	3.42	3.33
ROUTED TO							
+	100	9.50	1	FLOW	261.	1655.	4506.
				TIME	4.42	3.75	3.50
HYDROGRAPH AT							
+	Cc10	3.00	1	FLOW	5.	261.	994.
				TIME	3.42	3.17	3.08
HYDROGRAPH AT							
+	Cb10	1.80	1	FLOW	3.	160.	608.
				TIME	3.33	3.17	3.08
4 COMBINED AT							
+	100	31.00	1	FLOW	991.	5076.	13913.
				TIME	3.92	3.50	3.33
ROUTED TO							
+	50	31.00	1	FLOW	930.	5021.	13791.
				TIME	4.25	3.67	3.42
2 COMBINED AT							
+	50	58.83	1	FLOW	1869.	10318.	28449.
				TIME	4.08	3.50	3.25
ROUTED TO							
+	40	58.83	1	FLOW	1829.	10201.	28233.
				TIME	4.25	3.58	3.33
HYDROGRAPH AT							
+	Aj20	1.02	1	FLOW	67.	276.	658.
				TIME	3.00	3.00	2.92

ROUTED TO							
+	40	1.02	1	FLOW	15.	134.	422.
				TIME	4.92	3.92	3.50
HYDROGRAPH AT							
+	Aj10	1.92	1	FLOW	3.	138.	539.
				TIME	3.50	3.33	3.25
HYDROGRAPH AT							
+	Ai20	.80	1	FLOW	78.	324.	757.
				TIME	2.67	2.67	2.67
ROUTED TO							
+	40	.80	1	FLOW	32.	278.	676.
				TIME	3.17	2.83	2.75
HYDROGRAPH AT							
+	Ai10	.80	1	FLOW	10.	136.	424.
				TIME	3.00	2.83	2.83
HYDROGRAPH AT							
+	A50	.50	1	FLOW	45.	177.	414.
				TIME	2.83	2.75	2.75
4 COMBINED AT							
+	40a	4.02	1	FLOW	72.	641.	1783.
				TIME	3.00	2.83	2.83
3 COMBINED AT							
+	40	63.87	1	FLOW	1839.	10476.	29481.
				TIME	4.25	3.58	3.33
ROUTED TO							
+	30	63.87	1	FLOW	1751.	10338.	29186.
				TIME	4.50	3.67	3.42
HYDROGRAPH AT							
+	Ah20	2.50	1	FLOW	113.	523.	1308.
				TIME	3.25	3.17	3.08
ROUTED TO							
+	30	2.50	1	FLOW	101.	512.	1292.
				TIME	3.50	3.25	3.17
HYDROGRAPH AT							
+	Ah10	1.50	1	FLOW	17.	222.	701.
				TIME	3.17	3.00	2.92
3 COMBINED AT							
+	30a	67.87	1	FLOW	1776.	10727.	30753.
				TIME	4.50	3.67	3.33
HYDROGRAPH AT							
+	A40	3.00	1	FLOW	5.	261.	994.
				TIME	3.42	3.17	3.08
2 COMBINED AT							
+	30b	70.87	1	FLOW	1776.	10845.	31580.
				TIME	4.50	3.67	3.33
HYDROGRAPH AT							
+	Ag40	2.50	1	FLOW	433.	1059.	2009.
				TIME	3.08	3.08	3.08
ROUTED TO							
+	Ag3	2.50	1	FLOW	430.	1055.	2009.
				TIME	3.17	3.08	3.08

HYDROGRAPH AT							
+	Ag30	3.40	1	FLOW	419.	1257.	2651.
				TIME	3.00	2.92	2.92
2 COMBINED AT							
+	Ag3	5.90	1	FLOW	830.	2274.	4580.
				TIME	3.08	3.00	3.00
ROUTED TO							
+	Ag2	5.90	1	FLOW	691.	2096.	4397.
				TIME	3.42	3.25	3.17
HYDROGRAPH AT							
+	Ag20	3.50	1	FLOW	75.	552.	1580.
				TIME	3.25	3.17	3.08
2 COMBINED AT							
+	Ag2	9.40	1	FLOW	758.	2628.	5952.
				TIME	3.42	3.17	3.08
ROUTED TO							
+	30	9.40	1	FLOW	495.	2349.	5599.
				TIME	4.00	3.50	3.33
HYDROGRAPH AT							
+	Ag10	2.60	1	FLOW	5.	229.	870.
				TIME	3.33	3.17	3.08
3 COMBINED AT							
+	30c	82.87	1	FLOW	2171.	13135.	37890.
				TIME	4.42	3.67	3.33
HYDROGRAPH AT							
+	Af60	5.50	1	FLOW	907.	2235.	4272.
				TIME	3.17	3.08	3.08
HYDROGRAPH AT							
+	Af50	3.60	1	FLOW	635.	1545.	2949.
				TIME	3.08	3.08	3.00
2 COMBINED AT							
+	Af5	9.10	1	FLOW	1539.	3780.	7197.
				TIME	3.08	3.08	3.08
ROUTED TO							
+	Af4	9.10	1	FLOW	1469.	3692.	7117.
				TIME	3.25	3.17	3.17
HYDROGRAPH AT							
+	Af40	10.20	1	FLOW	1002.	3095.	6619.
				TIME	3.17	3.17	3.08
2 COMBINED AT							
+	Af4	19.30	1	FLOW	2461.	6787.	13693.
				TIME	3.25	3.17	3.17
ROUTED TO							
+	Af3	19.30	1	FLOW	1635.	5816.	12797.
				TIME	3.83	3.50	3.33
HYDROGRAPH AT							
+	Af30	13.10	1	FLOW	17.	878.	3453.
				TIME	3.58	3.42	3.33
HYDROGRAPH AT							
+	Af20	1.10	1	FLOW	32.	226.	622.
				TIME	3.00	2.92	2.92

3 COMBINED AT							
+	Af3	33.50	1	FLOW	1653.	6728.	16504.
				TIME	3.83	3.50	3.33
ROUTED TO							
+	Af2	33.50	1	FLOW	1552.	6585.	16346.
				TIME	4.08	3.67	3.42
HYDROGRAPH AT							
+	Af10	1.90	1	FLOW	3.	171.	648.
				TIME	3.33	3.17	3.08
2 COMBINED AT							
+	Af2	35.40	1	FLOW	1553.	6654.	16778.
				TIME	4.08	3.67	3.42
ROUTED TO							
+	30	35.40	1	FLOW	1508.	6592.	16660.
				TIME	4.33	3.75	3.50
2 COMBINED AT							
+	30	118.27	1	FLOW	3651.	19712.	53988.
				TIME	4.42	3.67	3.42
ROUTED TO							
+	20	118.27	1	FLOW	3514.	19502.	53805.
				TIME	4.58	3.75	3.42
HYDROGRAPH AT							
+	Ae60	2.00	1	FLOW	440.	1059.	1989.
				TIME	2.83	2.83	2.83
ROUTED TO							
+	Ae5	2.00	1	FLOW	390.	984.	1903.
				TIME	3.08	3.00	3.00
HYDROGRAPH AT							
+	Ae50	5.70	1	FLOW	608.	1863.	3941.
				TIME	3.08	3.08	3.00
2 COMBINED AT							
+	Ae5	7.70	1	FLOW	998.	2831.	5845.
				TIME	3.08	3.08	3.00
ROUTED TO							
+	Ae4	7.70	1	FLOW	800.	2632.	5638.
				TIME	3.50	3.25	3.17
HYDROGRAPH AT							
+	Ae40	12.30	1	FLOW	302.	2201.	6183.
				TIME	3.17	3.00	3.00
2 COMBINED AT							
+	Ae4	20.00	1	FLOW	998.	4579.	11509.
				TIME	3.42	3.17	3.08
ROUTED TO							
+	Ae3	20.00	1	FLOW	578.	3821.	10851.
				TIME	4.17	3.50	3.25
HYDROGRAPH AT							
+	Ae30	5.60	1	FLOW	136.	988.	2789.
				TIME	3.17	3.00	3.00
2 COMBINED AT							
+	Ae3	25.60	1	FLOW	589.	4317.	13070.
				TIME	4.17	3.42	3.17

ROUTED TO							
+	Ae2	25.60	1	FLOW	213.	3198.	11377.
				TIME	4.92	4.00	3.50
HYDROGRAPH AT							
+	Ae20	3.20	1	FLOW	5.	272.	1037.
				TIME	3.42	3.17	3.08
2 COMBINED AT							
+	Ae2	28.80	1	FLOW	213.	3255.	12046.
				TIME	4.92	4.00	3.50
ROUTED TO							
+	20	28.80	1	FLOW	2.	3161.	11845.
				TIME	4.92	4.17	3.58
HYDROGRAPH AT							
+	Ae10	1.50	1	FLOW	18.	235.	734.
				TIME	3.08	2.92	2.92
3 COMBINED AT							
+	20a	148.57	1	FLOW	3515.	21319.	64912.
				TIME	4.58	3.83	3.50
HYDROGRAPH AT							
+	Ad60	.90	1	FLOW	237.	559.	1038.
				TIME	2.75	2.75	2.75
ROUTED TO							
+	Ad4	.90	1	FLOW	231.	537.	1018.
				TIME	2.83	2.75	2.75
HYDROGRAPH AT							
+	Ad50	3.90	1	FLOW	699.	1708.	3251.
				TIME	3.08	3.00	3.00
ROUTED TO							
+	Ad4	3.90	1	FLOW	688.	1688.	3222.
				TIME	3.17	3.08	3.08
HYDROGRAPH AT							
+	Ad40	2.70	1	FLOW	480.	1171.	2231.
				TIME	3.08	3.00	3.00
3 COMBINED AT							
+	Ad4	7.50	1	FLOW	1295.	3189.	6092.
				TIME	3.08	3.00	3.00
ROUTED TO							
+	Ad3	7.50	1	FLOW	1123.	2982.	5881.
				TIME	3.42	3.25	3.17
HYDROGRAPH AT							
+	Ad30	1.80	1	FLOW	40.	294.	834.
				TIME	3.25	3.08	3.08
2 COMBINED AT							
+	Ad3	9.30	1	FLOW	1157.	3255.	6685.
				TIME	3.42	3.25	3.17
ROUTED TO							
+	Ad2	9.30	1	FLOW	1144.	3223.	6655.
				TIME	3.50	3.33	3.17
HYDROGRAPH AT							
+	Ad20	2.50	1	FLOW	49.	367.	1056.
				TIME	3.33	3.17	3.17

HEC-1 OUTPUT BASIN A and C 100%

2 COMBINED AT							
+	Ad2	11.80	1	FLOW	1187.	3582.	7711.
				TIME	3.50	3.25	3.17
ROUTED TO							
+	20	11.80	1	FLOW	834.	3153.	7314.
				TIME	4.08	3.58	3.42
HYDROGRAPH AT							
+	Ad10	1.50	1	FLOW	3.	131.	497.
				TIME	3.42	3.17	3.08
3 COMBINED AT							
+	20b	161.87	1	FLOW	4150.	24232.	72325.
				TIME	4.58	3.83	3.50
HYDROGRAPH AT							
+	A30	1.40	1	FLOW	16.	209.	662.
				TIME	3.08	3.00	2.92
2 COMBINED AT							
+	20	163.27	1	FLOW	4150.	24251.	72508.
				TIME	4.58	3.83	3.50
ROUTED TO							
+	10	163.27	1	FLOW	4057.	24055.	72186.
				TIME	4.75	3.92	3.50
HYDROGRAPH AT							
+	A20	2.00	1	FLOW	23.	303.	957.
				TIME	3.08	2.92	2.92
HYDROGRAPH AT							
+	A10	2.40	1	FLOW	4.	214.	811.
				TIME	3.33	3.17	3.08
3 COMBINED AT							
+	10	167.67	1	FLOW	4057.	24118.	72892.
				TIME	4.75	3.92	3.50

*** NORMAL END OF HEC-1 ***

HEC-1 INPUT BASIN A and C - 80%

```
1         ID       Kingman Master Drainage Plan
2         ID       City of Kingman, Arizona
3         ID       Project No. PH-K01-100-01
4         ID       Input File:  A18-0074.HEC   Output File:  A18-0075.HEC
5         ID  ************************************************************************
6         ID       Basin A and C
7         ID       3-Hr Storm:  2, 10 & 100 Yrs    ARF  80%
8         ID  ************************************************************************
9         IT  5.                    60.
10        IN  5.
11        IO  5.
12        JR  3.    0.37    0.63     1.0

13        KK  Ap10  SubBasin Ap10 Runoff
14        BA  0.40
15        PB  2.26
16        PI  1.3   1.3     1.1      1.5     1.5     1.8     1.5     1.8     1.8     1.5
17        PI  1.6   1.8     2.2      2.2     2.2     2.0     2.6     2.7     2.4     2.7
18        PI  3.3   3.1     2.9      3.0     3.1     4.2     5.0     3.5     6.8     7.3
19        PI  8.2   5.9     2.0      1.8     1.8     0.6
20        LS  0.    86.     0.
21        UD  0.30
```

REMAINING INPUT IS SAME AS FOR 100%

HEC-1 OUTPUT BASIN A and C 80%

Kingman Master Drainage Plan
City of Kingman, Arizona
Project No. PH-K01-100-01
Input File: A18-0076.HEC Output File: A18-0077.HEC

****

Basin A and C
3-Hr Storm: 2, 10 & 100 Yrs ARF: 80%

****

PEAK FLOW AND STAGE (END-OF-PERIOD) SUMMARY FOR MULTIPLE PLAN-RATIO ECONOMIC COMPUTATIONS
FLOWS IN CUBIC FEET PER SECOND, AREA IN SQUARE MILES
TIME TO PEAK IN HOURS

OPERATION	STATION	AREA	PLAN		RATIOS APPLIED TO PRECIPITATION RATIO 1 .37	RATIO 2 .63	RATIO 3 1.00
HYDROGRAPH AT							
+	Ap10	.40	1	FLOW	44.	134.	282.
				TIME	2.83	2.83	2.83
ROUTED TO							
+	Ap1	.40	1	FLOW	38.	134.	275.
				TIME	3.00	3.00	2.92
HYDROGRAPH AT							
+	A110	.90	1	FLOW	98.	302.	636.
				TIME	2.83	2.83	2.83
2 COMBINED AT							
+	Ap1	1.30	1	FLOW	127.	431.	907.
				TIME	2.92	2.83	2.83
ROUTED TO							
+	90	1.30	1	FLOW	127.	428.	904.
				TIME	2.92	2.83	2.83
HYDROGRAPH AT							
+	A100	1.30	1	FLOW	116.	364.	785.
				TIME	3.00	2.92	2.92
2 COMBINED AT							
+	90	2.60	1	FLOW	240.	775.	1656.
				TIME	2.92	2.92	2.83
ROUTED TO							
+	80	2.60	1	FLOW	157.	702.	1536.
				TIME	3.42	3.08	3.08
HYDROGRAPH AT							
+	Ao20	1.70	1	FLOW	97.	383.	899.
				TIME	3.00	3.00	2.92
HYDROGRAPH AT							
+	Ao30	3.10	1	FLOW	219.	712.	1555.
				TIME	3.17	3.17	3.08
2 COMBINED AT							
+	Ao2	4.80	1	FLOW	308.	1070.	2395.
				TIME	3.17	3.08	3.00
ROUTED TO							
+	80	4.80	1	FLOW	294.	1046.	2358.
				TIME	3.33	3.17	3.08

HEC-1 OUTPUT BASIN A and C 80%

HYDROGRAPH AT							
+	Ao10	.30	1	FLOW	33.	107.	229.
				TIME	2.75	2.75	2.75
HYDROGRAPH AT							
+	A90	4.00	1	FLOW	3.	292.	1143.
				TIME	3.33	3.08	3.00
4 COMBINED AT							
+	80	11.70	1	FLOW	455.	2051.	5085.
				TIME	3.33	3.17	3.08
ROUTED TO							
+	70	11.70	1	FLOW	332.	1958.	4932.
				TIME	3.83	3.33	3.17
HYDROGRAPH AT							
+	A80	1.40	1	FLOW	6.	125.	430.
				TIME	3.25	3.08	3.00
HYDROGRAPH AT							
+	A70	2.40	1	FLOW	9.	199.	695.
				TIME	3.33	3.17	3.08
3 COMBINED AT							
+	70	15.50	1	FLOW	337.	2232.	6014.
				TIME	3.83	3.33	3.17
ROUTED TO							
+	60	15.50	1	FLOW	318.	2197.	5950.
				TIME	4.08	3.42	3.25
HYDROGRAPH AT							
+	An20	2.20	1	FLOW	278.	765.	1554.
				TIME	2.92	2.83	2.83
ROUTED TO							
+	60	2.20	1	FLOW	137.	526.	1292.
				TIME	3.75	3.33	3.17
HYDROGRAPH AT							
+	An10	2.93	1	FLOW	192.	662.	1480.
				TIME	3.17	3.08	3.08
HYDROGRAPH AT							
+	Am10	1.50	1	FLOW	0.	84.	362.
				TIME	3.42	3.17	3.08
4 COMBINED AT							
+	60	22.13	1	FLOW	470.	3331.	8958.
				TIME	4.00	3.33	3.17
ROUTED TO							
+	50	22.13	1	FLOW	436.	3217.	8850.
				TIME	4.25	3.50	3.25
HYDROGRAPH AT							
+	Ak20	1.50	1	FLOW	7.	161.	542.
				TIME	3.17	2.92	2.92
ROUTED TO							
+	50	1.50	1	FLOW	0.	72.	382.
				TIME	.08	3.75	3.25
HYDROGRAPH AT							
+	Ak10	2.10	1	FLOW	0.	82.	463.
				TIME	.08	3.08	3.00

HEC-1 OUTPUT BASIN A and C 80%

HYDROGRAPH AT							
+	A60	2.10	1	FLOW	9.	205.	694.
				TIME	3.17	3.00	3.00
4 COMBINED AT							
+	50a	27.83	1	FLOW	436.	3384.	10062.
				TIME	4.25	3.50	3.25
HYDROGRAPH AT							
+	Cg10	2.40	1	FLOW	50.	319.	876.
				TIME	3.25	3.17	3.08
ROUTED TO							
+	130	2.40	1	FLOW	50.	316.	874.
				TIME	3.33	3.25	3.17
HYDROGRAPH AT							
+	Cf10	2.60	1	FLOW	67.	376.	991.
				TIME	3.25	3.17	3.08
2 COMBINED AT							
+	130	5.00	1	FLOW	116.	690.	1863.
				TIME	3.33	3.17	3.17
ROUTED TO							
+	120	5.00	1	FLOW	78.	644.	1826.
				TIME	3.83	3.42	3.25
HYDROGRAPH AT							
+	Ce20	1.80	1	FLOW	93.	372.	883.
				TIME	3.08	3.00	3.00
ROUTED TO							
+	120	1.80	1	FLOW	68.	347.	858.
				TIME	3.50	3.25	3.17
HYDROGRAPH AT							
+	Ce10	1.00	1	FLOW	0.	53.	286.
				TIME	.08	2.83	2.75
3 COMBINED AT							
+	120	7.80	1	FLOW	136.	979.	2745.
				TIME	3.75	3.33	3.17
ROUTED TO							
+	110	7.80	1	FLOW	120.	953.	2712.
				TIME	4.08	3.50	3.25
HYDROGRAPH AT							
+	Cd30	4.70	1	FLOW	304.	1000.	2199.
				TIME	3.25	3.25	3.17
ROUTED TO							
+	Cd2	4.70	1	FLOW	303.	997.	2191.
				TIME	3.33	3.25	3.25
HYDROGRAPH AT							
+	Cd20	1.60	1	FLOW	33.	242.	676.
				TIME	3.08	3.00	2.92
2 COMBINED AT							
+	Cd2	6.30	1	FLOW	327.	1179.	2719.
				TIME	3.33	3.17	3.17
ROUTED TO							
+	110	6.30	1	FLOW	240.	1073.	2624.
				TIME	3.83	3.50	3.33

HYDROGRAPH AT							
+	Cd10	2.60	1	FLOW	0.	101.	574.
				TIME	.08	3.08	3.00
3 COMBINED AT							
+	110	16.70	1	FLOW	351.	2070.	5722.
				TIME	4.00	3.50	3.25
ROUTED TO							
+	100	16.70	1	FLOW	338.	2046.	5684.
				TIME	4.17	3.58	3.33
HYDROGRAPH AT							
+	Cc20	3.10	1	FLOW	227.	731.	1598.
				TIME	3.17	3.08	3.08
ROUTED TO							
+	Cc1	3.10	1	FLOW	96.	540.	1424.
				TIME	4.17	3.58	3.42
HYDROGRAPH AT							
+	Cb20	4.90	1	FLOW	14.	325.	1162.
				TIME	3.50	3.33	3.25
ROUTED TO							
+	Cc1	4.90	1	FLOW	9.	310.	1149.
				TIME	4.33	3.58	3.33
HYDROGRAPH AT							
+	Cb30	1.50	1	FLOW	82.	304.	706.
				TIME	3.17	3.17	3.08
3 COMBINED AT							
+	Cc1	9.50	1	FLOW	119.	1044.	3168.
				TIME	4.00	3.50	3.33
ROUTED TO							
+	100	9.50	1	FLOW	83.	879.	2942.
				TIME	4.92	3.92	3.58
HYDROGRAPH AT							
+	Cc10	3.00	1	FLOW	0.	96.	560.
				TIME	.08	3.25	3.08
HYDROGRAPH AT							
+	Cb10	1.80	1	FLOW	0.	59.	345.
				TIME	.08	3.17	3.08
4 COMBINED AT							
+	100	31.00	1	FLOW	381.	2794.	8942.
				TIME	4.25	3.67	3.42
ROUTED TO							
+	50	31.00	1	FLOW	346.	2752.	8867.
				TIME	4.67	3.83	3.50
2 COMBINED AT							
+	50	58.83	1	FLOW	737.	5611.	18228.
				TIME	4.50	3.67	3.33
ROUTED TO							
+	40	58.83	1	FLOW	693.	5516.	18093.
				TIME	4.83	3.75	3.42
HYDROGRAPH AT							
+	Aj20	1.02	1	FLOW	27.	165.	443.
				TIME	3.08	3.00	2.92

ROUTED TO							
+	40	1.02	1	FLOW	0.	58.	237.
				TIME	4.92	4.25	3.58
HYDROGRAPH AT							
+	Aj10	1.92	1	FLOW	0.	50.	301.
				TIME	.08	3.42	3.25
HYDROGRAPH AT							
+	Ai20	.80	1	FLOW	29.	195.	515.
				TIME	2.75	2.67	2.67
ROUTED TO							
+	40	.80	1	FLOW	7.	136.	432.
				TIME	3.58	2.92	2.83
HYDROGRAPH AT							
+	Ai10	.80	1	FLOW	0.	63.	259.
				TIME	3.25	2.92	2.83
HYDROGRAPH AT							
+	A50	.50	1	FLOW	18.	107.	282.
				TIME	2.83	2.75	2.75
4 COMBINED AT							
+	40a	4.02	1	FLOW	18.	310.	1117.
				TIME	2.83	2.92	2.83
3 COMBINED AT							
+	40	63.87	1	FLOW	695.	5615.	18763.
				TIME	4.83	3.75	3.42
ROUTED TO							
+	30	63.87	1	FLOW	490.	5434.	18564.
				TIME	4.92	3.92	3.50
HYDROGRAPH AT							
+	Ah20	2.50	1	FLOW	40.	302.	863.
				TIME	3.25	3.17	3.08
ROUTED TO							
+	30	2.50	1	FLOW	28.	289.	853.
				TIME	3.75	3.33	3.25
HYDROGRAPH AT							
+	Ah10	1.50	1	FLOW	0.	102.	424.
				TIME	3.33	3.00	2.92
3 COMBINED AT							
+	30a	67.87	1	FLOW	498.	5587.	19390.
				TIME	4.92	3.92	3.50
HYDROGRAPH AT							
+	A40	3.00	1	FLOW	0.	96.	560.
				TIME	.08	3.25	3.08
2 COMBINED AT							
+	30b	70.87	1	FLOW	498.	5612.	19745.
				TIME	4.92	3.92	3.50
HYDROGRAPH AT							
+	Ag40	2.50	1	FLOW	276.	747.	1492.
				TIME	3.08	3.08	3.08
ROUTED TO							
+	Ag3	2.50	1	FLOW	274.	740.	1489.
				TIME	3.17	3.08	3.08

HEC-1 OUTPUT BASIN A and C 80%

HYDROGRAPH AT							
+	Ag30	3.40	1	FLOW	229.	824.	1883.
				TIME	3.00	3.00	2.92
2 COMBINED AT							
+	Ag3	5.90	1	FLOW	490.	1536.	3314.
				TIME	3.08	3.00	3.00
ROUTED TO							
+	Ag2	5.90	1	FLOW	351.	1424.	3140.
				TIME	3.58	3.25	3.17
HYDROGRAPH AT							
+	Ag20	3.50	1	FLOW	12.	284.	992.
				TIME	3.33	3.17	3.08
2 COMBINED AT							
+	Ag2	9.40	1	FLOW	361.	1701.	4120.
				TIME	3.58	3.25	3.17
ROUTED TO							
+	30	9.40	1	FLOW	200.	1358.	3735.
				TIME	4.50	3.67	3.42
HYDROGRAPH AT							
+	Ag10	2.60	1	FLOW	0.	84.	491.
				TIME	.08	3.25	3.08
3 COMBINED AT							
+	30c	82.87	1	FLOW	672.	6798.	23716.
				TIME	4.92	3.92	3.50
HYDROGRAPH AT							
+	Af60	5.50	1	FLOW	578.	1569.	3163.
				TIME	3.17	3.08	3.08
HYDROGRAPH AT							
+	Af50	3.60	1	FLOW	405.	1092.	2185.
				TIME	3.08	3.08	3.00
2 COMBINED AT							
+	Af5	9.10	1	FLOW	976.	2661.	5337.
				TIME	3.17	3.08	3.08
ROUTED TO							
+	Af4	9.10	1	FLOW	906.	2592.	5261.
				TIME	3.33	3.25	3.17
HYDROGRAPH AT							
+	Af40	10.20	1	FLOW	537.	2018.	4662.
				TIME	3.25	3.17	3.08
2 COMBINED AT							
+	Af4	19.30	1	FLOW	1425.	4598.	9916.
				TIME	3.33	3.17	3.17
ROUTED TO							
+	Af3	19.30	1	FLOW	752.	3771.	8991.
				TIME	4.17	3.58	3.42
HYDROGRAPH AT							
+	Af30	13.10	1	FLOW	0.	318.	1926.
				TIME	.08	3.42	3.33
HYDROGRAPH AT							
+	Af20	1.10	1	FLOW	5.	118.	397.
				TIME	3.17	2.92	2.92

3 COMBINED AT							
+	Af3	33.50	1	FLOW	752.	4100.	11023.
				TIME	4.17	3.58	3.42
ROUTED TO							
+	Af2	33.50	1	FLOW	705.	3991.	10895.
				TIME	4.50	3.75	3.50
HYDROGRAPH AT							
+	Af10	1.90	1	FLOW	0.	63.	368.
				TIME	.08	3.17	3.08
2 COMBINED AT							
+	Af2	35.40	1	FLOW	705.	4013.	11104.
				TIME	4.50	3.75	3.50
ROUTED TO							
+	30	35.40	1	FLOW	685.	3934.	11015.
				TIME	4.75	3.83	3.58
2 COMBINED AT							
+	30	118.27	1	FLOW	1327.	10707.	34621.
				TIME	4.92	3.92	3.50
ROUTED TO							
+	20	118.27	1	FLOW	1008.	10586.	34318.
				TIME	4.92	4.00	3.58
HYDROGRAPH AT							
+	Ae60	2.00	1	FLOW	285.	751.	1484.
				TIME	2.92	2.83	2.83
ROUTED TO							
+	Ae5	2.00	1	FLOW	225.	678.	1410.
				TIME	3.17	3.08	3.00
HYDROGRAPH AT							
+	Ae50	5.70	1	FLOW	328.	1218.	2794.
				TIME	3.17	3.08	3.08
2 COMBINED AT							
+	Ae5	7.70	1	FLOW	553.	1896.	4190.
				TIME	3.17	3.08	3.00
ROUTED TO							
+	Ae4	7.70	1	FLOW	365.	1673.	3979.
				TIME	3.67	3.33	3.17
HYDROGRAPH AT							
+	Ae40	12.30	1	FLOW	51.	1136.	3916.
				TIME	3.25	3.08	3.00
2 COMBINED AT							
+	Ae4	20.00	1	FLOW	387.	2585.	7618.
				TIME	3.67	3.25	3.08
ROUTED TO							
+	Ae3	20.00	1	FLOW	179.	1997.	6902.
				TIME	4.92	3.67	3.33
HYDROGRAPH AT							
+	Ae30	5.60	1	FLOW	23.	512.	1763.
				TIME	3.25	3.08	3.00
2 COMBINED AT							
+	Ae3	25.60	1	FLOW	180.	2153.	8107.
				TIME	4.92	3.67	3.25

ROUTED TO							
+	Ae2	25.60	1	FLOW	0.	1388.	6460.
				TIME	.08	4.42	3.75
HYDROGRAPH AT							
+	Ae20	3.20	1	FLOW	0.	100.	585.
				TIME	.08	3.25	3.17
2 COMBINED AT							
+	Ae2	28.80	1	FLOW	0.	1396.	6701.
				TIME	.08	4.42	3.67
ROUTED TO							
+	20	28.80	1	FLOW	0.	1335.	6563.
				TIME	.08	4.67	3.83
HYDROGRAPH AT							
+	Ae10	1.50	1	FLOW	0.	107.	448.
				TIME	3.25	3.00	2.92
3 COMBINED AT							
+	20a	148.57	1	FLOW	1008.	10903.	39513.
				TIME	4.92	4.00	3.67
HYDROGRAPH AT							
+	Ad60	.90	1	FLOW	154.	400.	778.
				TIME	2.75	2.75	2.75
ROUTED TO							
+	Ad4	.90	1	FLOW	148.	385.	758.
				TIME	2.83	2.83	2.75
HYDROGRAPH AT							
+	Ad50	3.90	1	FLOW	447.	1202.	2411.
				TIME	3.08	3.00	3.00
ROUTED TO							
+	Ad4	3.90	1	FLOW	431.	1190.	2390.
				TIME	3.25	3.08	3.08
HYDROGRAPH AT							
+	Ad40	2.70	1	FLOW	307.	824.	1654.
				TIME	3.08	3.08	3.00
3 COMBINED AT							
+	Ad4	7.50	1	FLOW	813.	2241.	4515.
				TIME	3.08	3.00	3.00
ROUTED TO							
+	Ad3	7.50	1	FLOW	632.	2031.	4295.
				TIME	3.58	3.33	3.17
HYDROGRAPH AT							
+	Ad30	1.80	1	FLOW	7.	151.	526.
				TIME	3.33	3.17	3.08
2 COMBINED AT							
+	Ad3	9.30	1	FLOW	637.	2163.	4807.
				TIME	3.58	3.33	3.17
ROUTED TO							
+	Ad2	9.30	1	FLOW	623.	2140.	4775.
				TIME	3.67	3.33	3.25
HYDROGRAPH AT							
+	Ad20	2.50	1	FLOW	8.	187.	662.
				TIME	3.42	3.25	3.17

HEC-1 OUTPUT BASIN A and C 80%

2 COMBINED AT							
+	Ad2	11.80	1	FLOW	630.	2323.	5425.
				TIME	3.67	3.33	3.25
ROUTED TO							
+	20	11.80	1	FLOW	382.	1971.	5027.
				TIME	4.50	3.75	3.50
HYDROGRAPH AT							
+	Ad10	1.50	1	FLOW	0.	48.	280.
				TIME	.08	3.25	3.08
3 COMBINED AT							
+	20b	161.87	1	FLOW	1346.	12659.	44527.
				TIME	4.92	4.00	3.58
HYDROGRAPH AT							
+	A30	1.40	1	FLOW	0.	96.	401.
				TIME	3.33	3.00	2.92
2 COMBINED AT							
+	20	163.27	1	FLOW	1346.	12664.	44612.
				TIME	4.92	4.00	3.58
ROUTED TO							
+	10	163.27	1	FLOW	557.	12403.	44384.
				TIME	4.92	4.17	3.67
HYDROGRAPH AT							
+	A20	2.00	1	FLOW	0.	139.	581.
				TIME	3.33	3.00	2.92
HYDROGRAPH AT							
+	A10	2.40	1	FLOW	0.	79.	459.
				TIME	.08	3.17	3.08
3 COMBINED AT							
+	10	167.67	1	FLOW	557.	12416.	44645.
				TIME	4.92	4.17	3.67

*** NORMAL END OF HEC-1 ***

HEC-1 INPUT BASIN B - 100%

```
ID        Kingman Master Drainage Plan
ID        City of Kingman, Arizona
ID        Project No. PH-K01-100-01
ID        Input File:  A18-0082.hec, Output File:  A18-0083.hec
ID  ***************************************************************************
ID        Drain B (Downtown)
ID        3-Hr Storm:  2, 10 & 100 Yrs
ID  ***************************************************************************
IT  5.                    60.
IN  5.
IO  5.
JR  3.    0.37    0.63    1.0

KK  Bf20  SubBasin Bf20 Runoff
BA  5.10
PB  2.83
PI  1.3   1.3     1.1     1.5     1.5     1.8     1.5     1.8     1.8     1.5
PI  1.6   1.8     2.2     2.2     2.2     2.0     2.6     2.7     2.4     2.7
PI  3.3   3.1     2.9     3.0     3.1     4.2     5.0     3.5     6.8     7.3
PI  8.2   5.9     2.0     1.8     1.8     0.6
LS  0.    89.     0.
UD  0.66

KK  220   Bf2---220
KM        Route flows from Bf2 to 220
RK  8000. 0.0275  0.05                    100.    5.

KK  Bf10  SubBasin Bf10 Runoff
BA  1.40
LS  0.    89.     0.
UD  0.40

KK  220
KM        Combine flows at 220
HC  2.

KK  210   220---210
KM        Route flows from 220 to 210
RK  6560. 0.0198  0.05                    160.    3.

KK  Be20  SubBasin Be20 Runoff
BA  2.1
LS  0.    89.     0.
UD  0.53

KK  210   Be2---210
KM        Route flows from Be2 to 210
RK  6000. 0.0217  0.05                    150.    5.

KK  Bd20  SubBasin Bd20 Runoff
BA  0.44
LS  0.    88.     0.
UD  0.28

KK  210   Bd2---210
KM        Route flows from Bd2 to 210
RK  4160. 0.0163  0.05                    320.    5.

KK  Be10  SubBasin Be10 Runoff
BA  0.80
LS  0.    90.     0.
UD  0.37

KK  Bd10  SubBasin Bd10 Runoff
BA  0.22
LS  0.    92.     0.
UD  0.30
```

HEC-1 INPUT BASIN B - 100%

```
KK  B20   SubBasin B20 Runoff
BA  0.23
LS  0.    91.     0.
UD  0.38

KK  210a
KM        Combine half of flows at 210
HC  4.

KK  210
KM        Combine remainder of flows at 210
HC  3.

KK  200   210---200
KM        Route flows from 210 to 200
RK  2500. 0.020   0.05                    160.    2.

KK  Bb50  SubBasin Bb50 Runoff
BA  0.45
LS  0.    88.     0.
UD  0.40

KK  Bb4   Bb5-- Bb4
KM        Route flows from Bb5 to Bb4
RK  880.  0.0262  0.05                    160.    5.

KK  Bb40  SubBasin Bb40 Runoff
BA  0.08
LS  0.    88.     0.
UD  0.40

KK  Bb4
KM        Combine flows at Bb4
HC  2.
KK  Bb3   Bb4---Bb3
KM        Route flows from Bb4 to Bb3
RK  2320. 0.0215  0.05                    160.    5.

KK  Bb30  SubBasin Bb30 Runoff
BA  0.23
LS  0.    91.     0.
UD  0.17

KK  Bb3
KM        Combine flows at Bb3
HC  2.

KK  Bb2   Bb3---Bb2
KM        Route flows from Bb3 to Bb2
RK  1700. 0.0147  0.05                    200.    5.

KK  Bc10  SubBasin Bc10 Runoff
BA  0.08
LS  0.    89.     0.
UD  0.12

KK  Bb2   Bc2---Bb2
KM        Route flows from Bc2 to Bb2
RK  3120. 0.0269  0.05                    240.    5.

KK  Bb20  SubBasin Bb20 Runoff
BA  0.36
LS  0.    93.     0.
UD  0.18

KK  Bb2
KM        Combine flows at Bb2
HC  3.
KK  200   Bb2---200
KM        Route flows from Bb2 to 200
RK  3800. 0.0158  0.05                    240.    5.
```

HEC-1 INPUT BASIN B - 100%

```
114          KK  Bb10  SubBasin Bb10 Runoff
115          BA  0.28
116          LS  0.    86.     0.
117          UD  0.26

118          KK  B10   SubBasin B10 Runoff
119          BA  0.23
120          LS  0.    91.     0.
121          UD  0.36
122          KK  Ba10  SubBasin Ba10 Runoff
123          BA  0.50
124          LS  0.    88.     0.
125          UD  0.43

126          KK  200
127          KM        Combine flows at 200
128          HC  5.
129          ZZ
```

HEC-1 OUTPUT BASIN B 100%

Kingman Master Drainage Plan
City of Kingman, Arizona
Project No. PH-K01-100-01
Input File: A18-0082.hec, Output File: A18-0083.hec

****

Drain B (Downtown)
3-Hr Storm: 2, 10 & 100 Yrs

****

PEAK FLOW AND STAGE (END-OF-PERIOD) SUMMARY FOR MULTIPLE PLAN-RATIO ECONOMIC COMPUTATIONS
FLOWS IN CUBIC FEET PER SECOND, AREA IN SQUARE MILES
TIME TO PEAK IN HOURS

OPERATION	STATION	AREA	PLAN		RATIOS APPLIED TO PRECIPITATION RATIO 1 .37	RATIO 2 .63	RATIO 3 1.00
HYDROGRAPH AT							
+	Bf20	5.10	1	FLOW	835.	2054.	3931.
				TIME	3.17	3.08	3.08
ROUTED TO							
+	220	5.10	1	FLOW	808.	2004.	3871.
				TIME	3.33	3.25	3.17
HYDROGRAPH AT							
+	Bf10	1.40	1	FLOW	297.	710.	1330.
				TIME	2.92	2.92	2.92
2 COMBINED AT							
+	220	6.50	1	FLOW	971.	2470.	4867.
				TIME	3.25	3.17	3.08
ROUTED TO							
+	210	6.50	1	FLOW	945.	2422.	4819.
				TIME	3.42	3.25	3.17
HYDROGRAPH AT							
+	Be20	2.10	1	FLOW	388.	946.	1792.
				TIME	3.00	3.00	3.00
ROUTED TO							
+	210	2.10	1	FLOW	355.	923.	1736.
				TIME	3.25	3.17	3.08
HYDROGRAPH AT							
+	Bd20	.44	1	FLOW	99.	241.	461.
				TIME	2.83	2.75	2.75
ROUTED TO							
+	210	.44	1	FLOW	67.	195.	415.
				TIME	3.33	3.08	3.00
HYDROGRAPH AT							
+	Be10	.80	1	FLOW	190.	439.	809.
				TIME	2.92	2.83	2.83
HYDROGRAPH AT							
+	Bd10	.22	1	FLOW	67.	141.	249.
				TIME	2.83	2.83	2.83
HYDROGRAPH AT							
+	B20	.23	1	FLOW	59.	130.	236.
				TIME	2.92	2.83	2.83
4 COMBINED AT							
+	210a	1.69	1	FLOW	329.	866.	1666.
				TIME	2.92	2.92	2.83
3 COMBINED AT							
+	210	10.29	1	FLOW	1468.	3901.	7799.
				TIME	3.33	3.17	3.08

HEC-1 OUTPUT BASIN B 100%

ROUTED TO	200	10.29	1	FLOW	1457.	3884.	7761.
+				TIME	3.33	3.17	3.08
HYDROGRAPH AT	Bb50	.45	1	FLOW	87.	217.	416.
+				TIME	2.92	2.92	2.92
ROUTED TO	Bb4	.45	1	FLOW	87.	215.	415.
+				TIME	3.00	2.92	2.92
HYDROGRAPH AT	Bb40	.08	1	FLOW	16.	39.	74.
+				TIME	2.92	2.92	2.92
2 COMBINED AT	Bb4	.53	1	FLOW	102.	254.	489.
+				TIME	3.00	2.92	2.92
ROUTED TO	Bb3	.53	1	FLOW	100.	247.	482.
+				TIME	3.08	3.00	3.00
HYDROGRAPH AT	Bb30	.23	1	FLOW	76.	167.	299.
+				TIME	2.67	2.67	2.67
2 COMBINED AT	Bb3	.76	1	FLOW	127.	336.	660.
+				TIME	3.00	2.75	2.75
ROUTED TO	Bb2	.76	1	FLOW	127.	332.	658.
+				TIME	3.17	2.92	2.83
HYDROGRAPH AT	Bc10	.08	1	FLOW	25.	58.	106.
+				TIME	2.67	2.67	2.67
ROUTED TO	Bb2	.08	1	FLOW	17.	41.	88.
+				TIME	3.17	2.92	2.83
HYDROGRAPH AT	Bb20	.36	1	FLOW	136.	278.	481.
+				TIME	2.67	2.67	2.67
3 COMBINED AT	Bb2	1.20	1	FLOW	239.	616.	1186.
+				TIME	2.75	2.75	2.75
ROUTED TO	200	1.20	1	FLOW	207.	590.	1113.
+				TIME	3.08	2.92	2.83
HYDROGRAPH AT	Bb10	.28	1	FLOW	53.	144.	286.
+				TIME	2.75	2.75	2.75
HYDROGRAPH AT	B10	.23	1	FLOW	60.	134.	241.
+				TIME	2.83	2.83	2.83
HYDROGRAPH AT	Ba10	.50	1	FLOW	94.	235.	452.
+				TIME	2.92	2.92	2.92
5 COMBINED AT	200	12.50	1	FLOW	1720.	4687.	9432.
+				TIME	3.33	3.08	3.08

HEC-1 INPUT BASIN B - 92%

```
1         ID       Kingman Master Drainage Plan
2         ID       City of Kingman, Arizona
3         ID       Project No. PH-K01-100-01
4         ID       Input File:  A18-0082.hec, Output File:  A18-0083.hec
5         ID  ************************************************************************
6         ID       Drain B (Downtown)
7         ID       3-Hr Storm:  2, 10 & 100 Yrs   ARF 92%
8         ID  ************************************************************************
9         IT  5.                    60.
10        IN  5.
11        IO  5.
12        JR  3.    0.37    0.63     1.0

13        KK  Bf20  SubBasin Bf20 Runoff
14        BA  5.10
15        PB  2.60
16        PI  1.3   1.3     1.1      1.5     1.5     1.8     1.5     1.8     1.8     1.5
17        PI  1.6   1.8     2.2      2.2     2.2     2.0     2.6     2.7     2.4     2.7
18        PI  3.3   3.1     2.9      3.0     3.1     4.2     5.0     3.5     6.8     7.3
19        PI  8.2   5.9     2.0      1.8     1.8     0.6
20        LS  0.    89.     0.
21        UD  0.66
```

REMAINING INPUT IS THE SAME AS BASIN B - 100%

HEC-1 OUTPUT BASIN B 92%

Kingman Master Drainage Plan
City of Kingman, Arizona
Project No. PH-K01-100-01
Input File: A18-0084.hec, Output File: A18-0085.hec

****

Drain B (Downtown)
3-Hr Storm: 2, 10 & 100 Yrs ARF 92%

****

PEAK FLOW AND STAGE (END-OF-PERIOD) SUMMARY FOR MULTIPLE PLAN-RATIO ECONOMIC COMPUTATIONS
FLOWS IN CUBIC FEET PER SECOND, AREA IN SQUARE MILES
TIME TO PEAK IN HOURS

OPERATION	STATION	AREA	PLAN		RATIOS APPLIED TO PRECIPITATION RATIO 1 .37	RATIO 2 .63	RATIO 3 1.00
HYDROGRAPH AT	Bf20	5.10	1	FLOW	708.	1802.	3514.
+				TIME	3.17	3.08	3.08
ROUTED TO	220	5.10	1	FLOW	676.	1751.	3450.
+				TIME	3.33	3.25	3.17
HYDROGRAPH AT	Bf10	1.40	1	FLOW	253.	626.	1193.
+				TIME	2.92	2.92	2.92
2 COMBINED AT	220	6.50	1	FLOW	807.	2153.	4331.
+				TIME	3.25	3.17	3.08
ROUTED TO	210	6.50	1	FLOW	773.	2101.	4280.
+				TIME	3.42	3.25	3.17
HYDROGRAPH AT	Be20	2.10	1	FLOW	329.	832.	1604.
+				TIME	3.00	3.00	3.00
ROUTED TO	210	2.10	1	FLOW	294.	808.	1547.
+				TIME	3.25	3.17	3.08
HYDROGRAPH AT	Bd20	.44	1	FLOW	84.	212.	413.
+				TIME	2.83	2.75	2.75
ROUTED TO	210	.44	1	FLOW	52.	166.	368.
+				TIME	3.33	3.08	3.00
HYDROGRAPH AT	Be10	.80	1	FLOW	163.	388.	728.
+				TIME	2.92	2.83	2.83
HYDROGRAPH AT	Bd10	.22	1	FLOW	58.	127.	225.
+				TIME	2.83	2.83	2.83
HYDROGRAPH AT	B20	.23	1	FLOW	51.	116.	213.
+				TIME	2.92	2.83	2.83
4 COMBINED AT	210a	1.69	1	FLOW	278.	757.	1488.
+				TIME	2.92	2.92	2.83
3 COMBINED AT	210	10.29	1	FLOW	1189.	3375.	6922.
+				TIME	3.33	3.17	3.08

HEC-1 OUTPUT BASIN B 92%

ROUTED TO							
+	200	10.29	1	FLOW	1184.	3348.	6876.
				TIME	3.33	3.17	3.08
HYDROGRAPH AT							
+	Bb50	.45	1	FLOW	74.	191.	372.
				TIME	2.92	2.92	2.92
ROUTED TO							
+	Bb4	.45	1	FLOW	74.	189.	371.
				TIME	3.00	2.92	2.92
HYDROGRAPH AT							
+	Bb40	.08	1	FLOW	13.	34.	66.
				TIME	2.92	2.92	2.92
2 COMBINED AT							
+	Bb4	.53	1	FLOW	86.	222.	437.
				TIME	3.00	2.92	2.92
ROUTED TO							
+	Bb3	.53	1	FLOW	83.	222.	431.
				TIME	3.08	3.00	3.00
HYDROGRAPH AT							
+	Bb30	.23	1	FLOW	66.	149.	270.
				TIME	2.67	2.67	2.67
2 COMBINED AT							
+	Bb3	.76	1	FLOW	106.	299.	586.
				TIME	3.00	2.75	2.75
ROUTED TO							
+	Bb2	.76	1	FLOW	106.	291.	584.
				TIME	3.17	2.92	2.83
HYDROGRAPH AT							
+	Bc10	.08	1	FLOW	21.	51.	95.
				TIME	2.67	2.67	2.67
ROUTED TO							
+	Bb2	.08	1	FLOW	13.	40.	78.
				TIME	3.17	2.92	2.83
HYDROGRAPH AT							
+	Bb20	.36	1	FLOW	120.	250.	436.
				TIME	2.67	2.67	2.67
3 COMBINED AT							
+	Bb2	1.20	1	FLOW	195.	539.	1058.
				TIME	2.75	2.75	2.75
ROUTED TO							
+	200	1.20	1	FLOW	165.	515.	1055.
				TIME	3.08	2.92	2.83
HYDROGRAPH AT							
+	Bb10	.28	1	FLOW	44.	125.	254.
				TIME	2.75	2.75	2.75
HYDROGRAPH AT							
+	B10	.23	1	FLOW	52.	119.	218.
				TIME	2.83	2.83	2.83
HYDROGRAPH AT							
+	Ba10	.50	1	FLOW	79.	206.	404.
				TIME	2.92	2.92	2.92
5 COMBINED AT							
+	200	12.50	1	FLOW	1377.	4047.	8344.
				TIME	3.33	3.08	3.08

APPENDIX B HYDRAULIC DETAILS

100 YEAR STORM

Major Drain Schematic B 0

Input Listing For Storm Plus B 1

BASIN A

Water Surface Profile Listing - Mohave Channel B12

Water Surface Profile Listing - Line-Ad B16

Water Surface Profile Listing - LineAd46 B20

Water Surface Profile Listing - Line-Ae B21

Water Surface Profile Listing - Line-Af B23

Water Surface Profile Listing - Line-Ag B28

Water Surface Profile Listing - Line-Ah B31

Water Surface Profile Listing - Line-Ai B33

Water Surface Profile Listing - Line-Aj B35

Water Surface Profile Listing - Line-Ak B37

Water Surface Profile Listing - Line-Am B38

Water Surface Profile Listing - Line-An B40

Water Surface Profile Listing - Line-Ao B43

Water Surface Profile Listing - Line-Ap B46

BASIN C

Water Surface Profile Listing - Railway Channel B47

Water Surface Profile Listing - Line-Cb B50

Water Surface Profile Listing - Line-Cc B51

Water Surface Profile Listing - Line-Cd B52

Water Surface Profile Listing - Line-Ce B56

Water Surface Profile Listing - Line-Cf B59

Water Surface Profile Listing - Line-Cg B61

BASIN B

Water Surface Profile Listing - Line-Bb (2 Year) B65

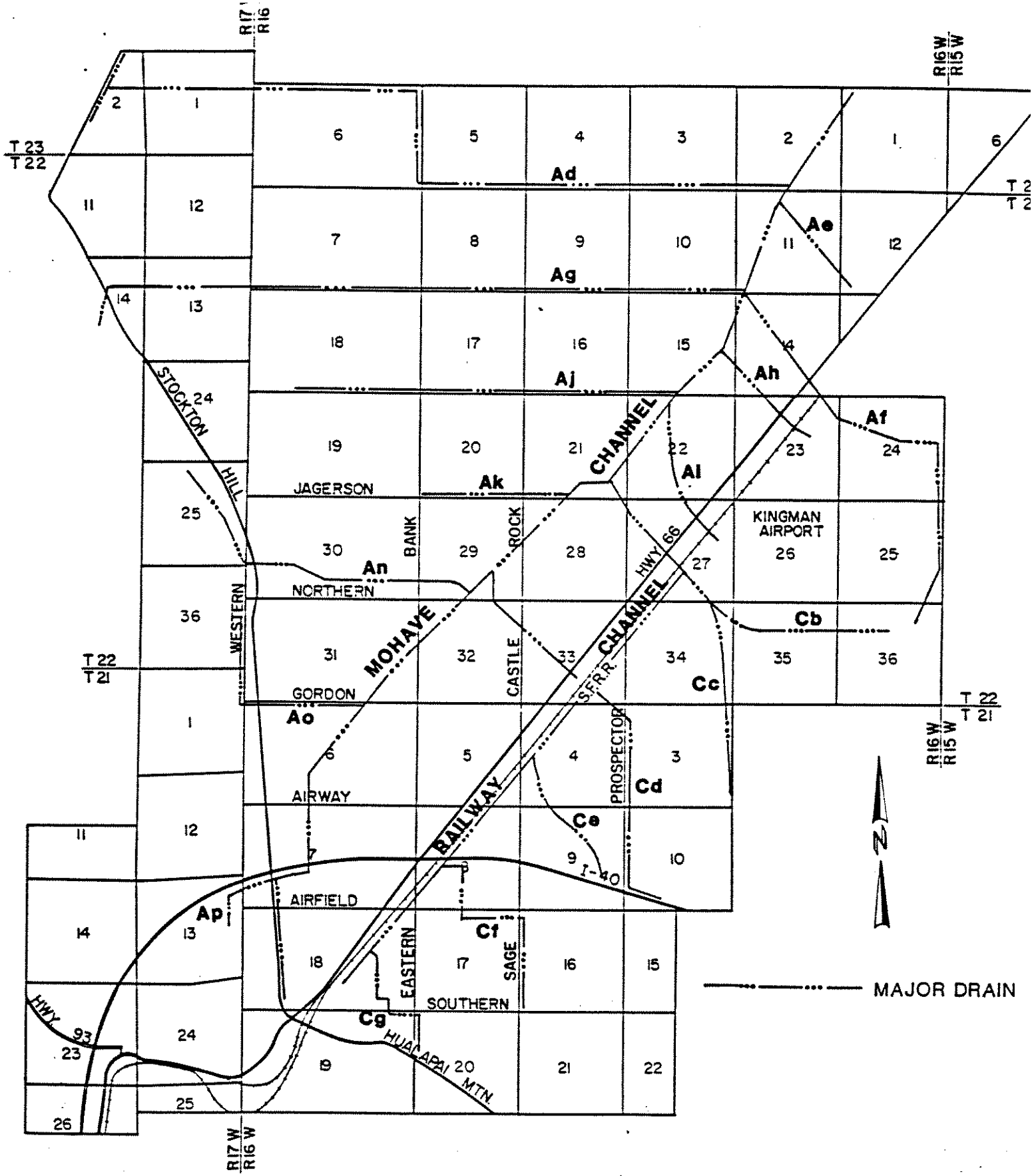

Major Drain Schematic

Input Listing for Storm Plus

```
JD  0  0  1
T1 KINGMAN MASTER DRAINAGE PLAN
T2 MOHAVE1   STA 0 - 31,800
T3 Q100
SO    000.  3178.   11                                3183.57
R    6280.  3205.0  11       .030
JX   6300.  3207.0  11  9    .100   8816.            3207.5          45.
R    6320.  3207.2  11       .030
R   12580.  3232.5  10       .030
JX  12600.  3234.5  10  1    .100  14585.            3235.           45.
R   12620.  3234.7  10       .030
R   18520.  3260.2   9       .030
R   24080.  3279.5   9       .030
JX  24100.  3281.5   9  2    .100  10746.            3282.           45.
R   24120.  3281.7   9       .030
R   31480.  3305.5   1       .030
JX  31500.  3307.5   1  2    .100   3546.            3308.           45.
R   31800.  3308.3   1       .030
SH                   1                               3314.3
CD   1  1              9.    200.  3.   3.
CD   2  1              7.    200.  3.   3.
CD   4  1              5.     10.  3.   3.
CD   9  1             10.    400.  3.   3.
CD  10  1             10.    600.  3.   3.
CD  11  1             10.    700.  3.   3.

Q          8364.


JD  0  0  1
T1 KINGMAN MASTER DRAINAGE PLAN
T2 MOHAVE2   STA 31,800 - 50,400
T3 Q100
SO  31800.  3308.3   1                               3314.2
R   33280.  3313.2   1       .030
JX  33300.  3315.2   1  3    .100  1455.             3315.7          45.
R   33320.  3315.4   1       .030
R   42480.  3358.4   2       .030
JX  42500.  3360.4   2  3    .100  4765.             3361.           45.
R   42520.  3360.9   2       .030
R   50400.  3405.6   3       .030
SH                   3                               3411.6
CD   1  1              8.    150.  3.   3.
CD   2  1              7.    120.  3.   3.
CD   3  1              6.     50.  3.   3.

Q          2144.
```

Input Listing for Storm Plus

```
JD  0  0  1
T1 KINGMAN MASTER DRAINAGE PLAN
T2 LINE Ad
T3 Q100
SO       .00 3208.0  1                              3212.0
R    2170.00 3236.9  1       .03
R    3922.00 3262.5  1       .03
R    6112.00 3294.4  1       .03
R    8083.00 3323.2  1       .03
R   10054.00 3351.9  1       .03
R   12025.00 3380.7  1       .03
R   14215.00 3412.6  1       .03
R   16186.00 3441.4  1       .03
R   18380.00 3472.3  1       .03
JX  18400.00 3475.3  1  2    .10   597.0          3472.5          90.0
R   23580.00 3516.0  1       .03
JX  23600.00 3519.1  1  2    .1    652.0          3516.2          90.0
R   24800.0  3534.6  1       .03
R   26800.0  3571.9  1       .03
R   27800.0  3590.6  1       .03
R   28800.0  3609.3  1       .03
R   29800.0  3627.9  1       .03
R   30800.0  3646.6  1       .03
R   31300.0  3656.9  1       .03
R   33300.0  3710.4  1       .03
R   35300.0  3763.8  1       .03
R   37300.0  3817.2  1       .03
R   39300.0  3870.6  1       .03
R   39580.0  3876.0  1       .03
JX  39600.0  3880.1  1  3    .10  2583.0          3880.0          90.0
R   41600.0  3902.0  3       .03
SH                   1                              3905.
CD  1   1             7.      150.  3.   3.
CD  2   1             5.       20.  3.   3.
CD  3   1             7.       80.  3.   3.

Q         3139.


JD  0  0  1
T1 KINGMAN MASTER DRAINAGE PLAN
T2 LINE Ad46
T3 Q100
SO 00000.00 3880.00  1                              3883.
R  02000.00 3968.00  1       .03
SH                   1                              3971.
CD   1  1             7.     30.   2.   2.

Q         1018.
```

Input Listing for Storm Plus

```
JD  0  0  1
T1 KINGMAN MASTER DRAINAGE PLAN
T2 LINE Ae
T3 Q100
SO      0.00 3215.0  1                              3218.
R    2000.00 3226.0  1       .03
R    3240.00 3235.3  1       .03
R    3870.00 3241.0  1       .03
R    4500.00 3246.6  1       .03
R    5646.00 3264.8  1       .03
R    6028.00 3270.8  1       .03
R    6400.00 3276.9  1       .03
SH                   1                              3280.
CD   1  1             7.     200.  3.   3.

Q          9996.


JD  0  0  1
T1 KINGMAN MASTER DRAINAGE PLAN
T2 LINE Af
T3 Q100
SO       .00 3235.0  1       .03                    3239.
R     884.00 3238.5  1       .03
R    1788.00 3244.1  1       .03
R    2692.00 3249.6  1       .03
R    4972.00 3266.4  1       .03
R    5916.00 3277.9  1       .03
R    6800.00 3291.3  1       .03
R    8040.00 3303.7  1       .03
R    8984.00 3315.1  1       .03
R   10164.00 3329.4  1       .03
R   11108.00 3340.9  1       .03
R   12052.00 3352.3  1       .03
R   12996.00 3363.8  1       .03
R   14176.00 3378.1  1       .03
R   15120.00 3389.6  1       .03
R   16064.00 3401.0  1       .03
R   17008.00 3412.5  1       .03
R   17580.00 3418.2  1       .03
JX  17600.00 3420.2  1  2    .10 13780.             3419.          45.
R   17716.00 3421.1  2       .03
R   18188.00 3426.8  2       .03
R   18424.00 3429.7  2       .03
R   18660.00 3432.5  2       .03
R   19132.00 3438.3  2       .03
R   20076.00 3449.7  2       .03
R   21020.00 3461.2  2       .03
R   21964.00 3472.6  2       .03
R   22400.00 3475.5  2       .03
SH                   2                              3480.
CD   1  1             8.     250.  3.   3.
CD   2  1             5.     20.   3.   3.

Q          622.
```

Input Listing for Storm Plus

```
JD  0  0  1
T1 KINGMAN MASTER DRAINAGE PLAN
T2 LINE Ag
T3 Q100
SO       0.0 3242.0  1                              3247.0
R    28490.0 3676.8  1       .03
JX   28495.0 3676.9  1  3    .10  1048.0            3678.0          45.0
R    28500.0 3677.0  1       .03
R    31000.0 3770.0  2       .03
JX   33100.0 3778.1  2  3    .03  2288.0            3779.0          45.0
R    33200.0 3778.5  2       .10                         100.
R    34900.0 3786.1  2       .03
SH                   2                              3789.0
CD   1  1               8.0    100.  3.   3.
CD   2  1               8.0     80.  3.   3.
CD   3  1               5.0     20.  3.   3.

Q            1983.


JD  0  0  1
T1 KINGMAN MASTER DRAINAGE PLAN
T2 LINE Ah
T3 Q100
SO      0.00 3242.0  1                              3245.
R    3000.00 3262.0  1       .03
R    3653.00 3265.9  1       .03
R    4326.00 3271.8  1       .03
R    4999.00 3277.8  1       .03
R    5316.00 3281.6  1       .03
R    5633.00 3285.4  1       .03
R    5950.00 3289.1  1       .03
R    6267.00 3292.9  1       .03
R    6584.00 3296.7  1       .03
R    6901.00 3300.5  1       .03
R    7200.00 3304.2  1       .03
SH                   1                              3307.
CD   1  1             5.     50.   3.   3.

Q         1270.
```

Input Listing for Storm Plus

```
JD  0  0  1
T1 KINGMAN MASTER DRAINAGE PLAN
T2 LINE Ai
T3 Q100
SO      0.00 3258.0  1                              3262.
R    3500.00 3274.0  1       .03
R    4360.00 3279.2  1       .03
R    5240.00 3286.3  1       .03
R    6120.00 3293.5  1       .03
R    7000.00 3300.6  1       .03
R    7210.00 3303.7  1       .03
R    7420.00 3308.   1       .03
SH                   1                              3311.
CD   1  1             5.     20.   3.   3.

Q         676.


JD  0  0  1
T1 KINGMAN MASTER DRAINAGE PLAN
T2 LINE Aj
T3 Q100
SO 0000.00  3260.00  1                              3264.
R     389.00 3263.1  1       .03
R   10159.00 3385.4  1       .03
R   12337.00 3413.9  1       .03
R   14152.00 3437.6  1       .03
R   16330.00 3466.1  1       .03
R   18145.00 3489.8  1       .03
R   19600.00 3508.8  1       .03
SH                   1                              3512.3
CD   1  1             6.     20.   3.   3.

Q         422.


JD  0  0  1
T1 KINGMAN MASTER DRAINAGE PLAN
T2 LINE Ak
T3 Q100
SO     00.00 3292.0  1       .03                    3295.
R    7200.00 3356.0  1       .03
SH                   2                             3359.0
CD   1  1             6.     20.   3.   3.
CD   2  1             5.     20.   3.   3.

Q         697.
```

Input Listing for Storm Plus

```
JD  0  0  1
T1 KINGMAN MASTER DRAINAGE PLAN
T2 LINE Am
T3 Q100
SO      0.00 3310.5  1                                3313.
R     500.00 3311.8  1       .03
R    2652.00 3323.8  1       .03
R    4324.00 3337.6  1       .03
R    5160.00 3344.5  1       .03
R    5996.00 3351.4  1       .03
R    7196.00 3368.0  1       .03
R    7436.00 3371.3  1       .03
R    7900.00 3377.9  1       .03
SH                   1                                3381.
CD   1  1             5.     20.   3.   3.

Q         601.


JD  0  0  1
T1 KINGMAN MASTER DRAINAGE PLAN
T2 LINE An
T3 Q100
SO      0.00 3316.7  1                                3321.3
R    5114.00 3345.9  1       .03
R    6116.00 3357.5  1       .03
R    8470.00 3386.5  1       .03
JX   8471.00 3386.7  1  2    .10  1020.               3387.          45.
R   10124.00 3404.1  1       .03
R   12128.00 3427.4  1       .03
R   14000.00 3452.4  1       .03
R   15000.00 3471.3  1       .03
R   16000.00 3490.2  1       .03
R   17000.00 3509.1  1       .03
SH                   1                                3515.
CD   1  1             7.     60.   3.   3.
CD   2  1             7.     40.   3.   3.

Q         1833.
```

Input Listing for Storm Plus

```
JD  0  0  1
T1 KINGMAN MASTER DRAINAGE PLAN
T2 Line Ao   Bull Mountain
T3 Q100
SO    000.  3350.    1                                  3354.
R    5680.  3426.    1       .030
TS   5700.  3426.5   7       .015
WX                   2
R    5780.  3428.    2       .014
WE                   7
R    6400.  3440.    3       .015
R    7200.  3451.    4       .020
JX   7210.  3451.5   5  6    .100  1101.               3452.          45.
R    10000. 3511.    5       .020
SH                   5                                  3514.
CD   1  1             10.     70.   3.   3.
CD   2  3   6  1.0    5.      76.
CD   3  1             10.     28.   2.   2.
CD   4  1             10.     40.   2.   2.
CD   5  1             8.      30.   2.   2.
CD   6  1             5.      20.   2.   2.
CD   7  1             10.     76.   2.   2.
CD   8  1             4.      10.   2.   2.

Q         2133.


JD  0  0  1
T1 KINGMAN MASTER DRAINAGE PLAN
T2 LINE Ap   (GOLF COURSE)
T3 Q100
SO    000.   3420.0  1                                  3424.
R    3500.0  3460.0  1       .03
SH                   1                                  3464.
CD   1  1             6.      10.   3.   3.

Q         379.
```

Input Listing for Storm Plus

```
D  0  0  1
T1 KINGMAN MASTER DRAINAGE PLAN
T2 RAILWAY   50 - 150
T3 Q100
SO    000.  3282.    1                                  3288.0
R    6180.  3339.0   1       .030
JX   6200.  3341.0   1  2    .100   4752.               3341.5          45.
R    6220.  3341.5   1       .030
R   13180.  3375.0   2       .030
JX  13200.  3377.0   2  3    .100   3336.               3377.5          45.
R   13220.  3377.5   2       .030
R   17780.  3409.0   3       .030
JX  17800.  3411.0   3  3    .100   1305.               3411.5          45.
R   17820.  3411.5   3       .030
R   24980.  3460.0   4       .030
JX  25000.  3462.0   4  3    .100   1386.               3462.5          45.
R   25020.  3462.5   4       .030
R   29980.  3489.0   5       .030
JX  30000.  3491.0   5  3    .100    989.               3491.5          45.
R   30020.  3491.5   5       .030
R   33300.  3498.4   6       .030
SH                    6                                  3503.
CD   1  1             10.     130.  3.   3.
CD   2  1             10.     100.  3.   3.
CD   3  1             10.      50.  3.   3.
CD   4  1              8.      40.  3.   3.
CD   5  1              8.      20.  3.   3.
CD   6  1              7.      10.  3.   3.

Q           300.


JD  0  0  1
T1 KINGMAN MASTER DRAINAGE PLAN
T2 LINE Cb
T3 Q100
SO     00.00 3381.0  1       .03                         3385.
R    8800.00 3470.0  1       .03
SH                    1                                  3474.0
CD   1  1              6.      40.  3.   3.

Q           1782.
```

Input Listing for Storm Plus

```
JD  0  0  1
T1 KINGMAN MASTER DRAINAGE PLAN
T2 LINE Cc
T3 Q100
SO     00.00 3341.0  1        .03                    3345.
R    3190.00 3381.0  1        .03
JX   3200.00 3381.2  1  2     .10 2345.              3384.3        45.
TS   3210.   3384.5  1        .10
R    3230.   3384.7  2        .03
R   11200.00 3510.0  2        .03
SH                   2                               3513.0
CD   1  1             8.      60.   3.   3.
CD   2  1             6.      40.   3.   3.

Q          1960.


JD  0  0  1
T1 KINGMAN MASTER DRAINAGE PLAN
T2 LINE Cd
T3 Q100
SO     00.00 3382.0  1                               3385.5
R     240.00 3385.3  1        .03
R    1032.00 3400.1  1        .03
R    2136.00 3414.2  1        .03
R    3240.00 3428.4  1        .03
R    4068.00 3439.0  1        .03
R    5172.00 3453.1  1        .03
R    6000.00 3463.7  1        .03
R    7037.00 3483.2  1        .03
R    8094.00 3502.7  1        .03
R    9000.00 3519.4  1        .03
R   10000.00 3544.2  1        .03
R   11000.0  3568.0  1        .03
R   11600.00 3576.0  1        .03
R   14400.00 3578.0  1        .03
SH                   1                               3579.
CD   1  1             7.      60.   3.   3.

Q          3657.
```

Input Listing for Storm Plus

```
JD  0  0  1
T1 KINGMAN MASTER DRAINAGE PLAN
T2 LINE Ce
T3 Q100
SO       .00 3415.0  1       .03                    3418.
R     284.00 3416.7  1       .03
R     588.00 3420.4  1       .03
R    1196.00 3427.8  1       .03
R    2092.00 3442.6  1       .03
R    3128.00 3461.9  1       .03
R    4016.00 3478.6  1       .03
R    5052.00 3497.9  1       .03
R    6041.00 3518.9  1       .03
R    7037.00 3547.5  1       .03
R    7200.00 3552.2  1       .03
SH                   1                              3558.
CD   1  1             6.     40.   3.   3.

Q         1235.


JD  0  0  1
T1 KINGMAN MASTER DRAINAGE PLAN
T2 LINE Cf
T3 Q100
SO      0.00 3472.0  1                              3475.5
R      50.00 3472.5  1       .03
R    1190.00 3478.5  1       .03
TS   1210.00 3481.5  1       .10
R    1220.0  3481.7  1       .03
R    3590.0  3523.0  1       .03
TS   3610.0  3526.0  1       .10
R    3620.0  3526.1  1       .03
R    6390.0  3561.0  1       .03
TS   6410.0  3564.0  1       .10
R    6420.0  3564.1  1       .03
R   10400.0  3635.0  1       .03
SH                   1                              3639.
CD   1  1             6.     40.   3.   3.

Q         1444.
```

Input Listing for Storm Plus

```
JD  0  0  1
T1 KINGMAN MASTER DRAINAGE PLAN
T2 LINE Cg
T3 Q100
SO   0000.00 3510.0  1        .03                    3513.
R    1095.00 3520.0  1        .03
TS   1100.00 3522.0  1        .10
R    4495.0  3550.0  1        .03
TS   4500.0  3552.0  1        .10
R    5595.00 3560.0  1        .03
TS   5600.0  3562.0  1        .10
R    6395.00 3580.0  1        .03
R    7700.00 3620.0  1        .03
TS   7705.0  3622.0  1        .10
R    10400.0 3660.0  1        .03
SH                   1                              3683.5
CD   1  1             6.      40.    3.    3.

Q        1289.


JD  0  0  1
T1 KINGMAN MASTER DRAINAGE PLAN
T2 LINE Bb   (DOWNTOWN)
T3 Q2
SO    000.   3252.0  1                               3254.
R    0800.0  3265.0  1        .03
R    2000.0  3290.0  1        .03
R    2800.0  3300.0  1        .03
JX   2800.0  3300.0  2  3     .014   80.             3300.          45.
R    4400.0  3327.0  2        .014
TS   4410.0  3327.1  4        .03
JX   4410.0  3327.1  4  3     .03    27.             3327.1         45.
R    5000.0  3337.0  4        .03
R    5600.0  3351.0  2        .014
R    6000.0  3365.0  4        .03
R    7000.0  3383.0  4        .03
JX   7000.0  3383.0  4  3     .03    13.             3383.          45.
R    7950.0  3404.0  4        .03
SH                   4                              3406.
CD   1  1             6.      20.    3.    3.
CD   2  4             3.5
CD   3  1             6.      20.    3.    3.
CD   4  1             6.      10.    3.    3.

Q         87.
```

WATER SURFACE PROFILE LISTING

KINGMAN MASTER DRAINAGE PLAN
MOHAVE1 STA 0 - 31,800
Q100

0 STATION / 0 L/ELEM	INVERT ELEV / SO	DEPTH OF FLOW	W.S. ELEV	Q	VEL	VEL HEAD / SF AVE	ENERGY GRD.EL. / HF	SUPER ELEV	CRITICAL DEPTH / NORM DEPTH		HGT/ DIA	BASE/ ID NO.	ZL / ZR	NO PIER	AVBPR
0 .00	3178.00	5.57	3183.57	46057.0	11.54	2.07	3185.64	.00	5.09		10.00	700.00	3.00	0	.00
0 79.28	.00430					.00527	.42			6.05			3.00		
0 79.28	3178.34	5.84	3184.18	46057.0	11.00	1.88	3186.06	.00	5.09		10.00	700.00	3.00	0	.00
0 289.37	.00430					.00458	1.33			6.05			3.00		
0 368.65	3179.58	6.05	3185.64	46057.0	10.59	1.74	3187.38	.00	5.09		10.00	700.00	3.00	0	.00
0 5911.35	.00430					.00430	25.42			6.05			3.00		
0 6280.00	3205.00	6.05	3211.05	46057.0	10.59	1.74	3212.80	.00	5.09		10.00	700.00	3.00	0	.00
0JUNCT STR	.10000					.04190	.84						3.00		
0 6300.00	3207.00	5.80	3212.80	37241.0	8.95	1.24	3214.05	.00	4.42		10.00	700.00	3.00	0	.00
0 20.00	.01000					.00349	.07			4.14			3.00		
0 6320.00	3207.20	5.56	3212.76	37241.0	10.87	1.83	3214.59	.00	4.89		10.00	600.00	3.00	0	.00
0 143.59	.00404					.00472	.68			5.95			3.00		
0 6463.59	3207.78	5.82	3213.60	37241.0	10.36	1.67	3215.27	.00	4.89		10.00	600.00	3.00	0	.00
0 356.55	.00404					.00420	1.50			5.95			3.00		
0 6820.14	3209.22	5.95	3215.17	37241.0	10.13	1.59	3216.77	.00	4.89		10.00	600.00	3.00	0	.00
0 5759.86	.00404					.00404	23.29			5.95			3.00		
0 12580.00	3232.50	5.95	3238.45	37241.0	10.13	1.59	3240.05	.00	4.89		10.00	600.00	3.00	0	.00
0JUNCT STR	.10000					.03316	.66						3.00		
0 12600.00	3234.50	5.52	3240.02	22656.0	6.66	.69	3240.71	.00	3.52		10.00	600.00	3.00	0	.00
0 20.00	.01000					.00206	.04			3.37			3.00		
0 12620.00	3234.70	5.30	3240.00	22656.0	10.27	1.64	3241.64	.00	4.58		10.00	400.00	3.00	0	.00
0 274.75	.00432					.00462	1.27			5.51			3.00		
0 12894.75	3235.89	5.51	3241.40	22656.0	9.87	1.51	3242.91	.00	4.58		10.00	400.00	3.00	0	.00
0 5625.25	.00432					.00432	24.31			5.51			3.00		
0 18520.00	3260.20	5.51	3265.71	22656.0	9.87	1.51	3267.22	.00	4.58		10.00	400.00	3.00	0	.00
0 221.98	.00347					.00401	.89			5.88			3.00		
0 18741.98	3260.97	5.77	3266.74	22656.0	9.41	1.38	3268.12	.00	4.58		10.00	400.00	3.00	0	.00
0 494.40	.00347					.00359	1.77			5.88			3.00		
0 19236.38	3262.69	5.88	3268.57	22656.0	9.22	1.32	3269.89	.00	4.58		10.00	400.00	3.00	0	.00
0 4843.62	.00347					.00347	16.82			5.88			3.00		
0 24080.00	3279.50	5.88	3285.38	22656.0	9.22	1.32	3286.70	.00	4.58		10.00	400.00	3.00	0	.00
0JUNCT STR	.10000					.02692	.54						3.00		
0 24100.00	3281.50	5.29	3286.79	11910.0	5.42	.46	3287.24	.00	3.00		10.00	400.00	3.00	0	.00
0 20.00	.01000					.00147	.03			2.92			3.00		

WATER SURFACE PROFILE LISTING

KINGMAN MASTER DRAINAGE PLAN

MOHAVE1 STA 0 - 31,800

Q100

O STATION	INVERT ELEV	DEPTH OF FLOW	W.S. ELEV	Q	VEL	VEL HEAD	ENERGY GRD.EL.	SUPER ELEV	CRITICAL DEPTH		HGT/ DIA	BASE/ ID NO.	ZL	NO PIER	AVBPR
O L/ELEM	SO					SF AVE	HF			NORM DEPTH			ZR		
0 24120.00	3281.70	5.08	3286.78	11910.0	10.90	1.85	3288.62	.00	4.68		9.00	200.00	3.00	0	.00
0 25.29	.00323					.00571	.14			6.13			3.00		
0 24145.29	3281.78	5.31	3287.09	11910.0	10.40	1.68	3288.77	.00	4.68		9.00	200.00	3.00	0	.00
0 52.17	.00323					.00492	.26			6.13			3.00		
0 24197.46	3281.95	5.55	3287.50	11910.0	9.91	1.53	3289.02	.00	4.68		9.00	200.00	3.00	0	.00
0 112.12	.00323					.00423	.47			6.13			3.00		
0 24309.58	3282.31	5.80	3288.11	11910.0	9.45	1.39	3289.50	.00	4.68		9.00	200.00	3.00	0	.00
0 330.19	.00323					.00364	1.20			6.13			3.00		
0 24639.77	3283.38	6.06	3289.44	11910.0	9.01	1.26	3290.70	.00	4.68		9.00	200.00	3.00	0	.00
0 596.98	.00323					.00330	1.97			6.13			3.00		
0 25236.75	3285.31	6.13	3291.44	11910.0	8.89	1.23	3292.67	.00	4.68		9.00	200.00	3.00	0	.00
0 6243.25	.00323					.00323	20.20			6.13			3.00		
0 31480.00	3305.50	6.13	3311.63	11910.0	8.89	1.23	3312.86	.00	4.68		9.00	200.00	3.00	0	.00
OJUNCT STR	.10000					.02946	.59						3.00		
0 31500.00	3307.50	5.68	3313.18	8364.0	6.78	.72	3313.90	.00	3.72		9.00	200.00	3.00	0	.00
0 300.00	.00267					.00220	.66			5.27			3.00		
0 31800.00	3308.30	5.48	3313.78	8364.0	7.05	.77	3314.56	.00	3.72		9.00	200.00	3.00	0	.00

WATER SURFACE PROFILE LISTING

KINGMAN MASTER DRAINAGE PLAN
MOHAVE2 STA 31,800 - 50,400
Q100

O STATION / O L/ELEM	INVERT ELEV / SO	DEPTH OF FLOW	W.S. ELEV	Q	VEL	VEL HEAD / SF AVE	ENERGY GRD.EL. / HF	SUPER ELEV	CRITICAL DEPTH / NORM DEPTH	HGT/ DIA	BASE/ ID NO.	ZL / ZR	NO PIER	AVBPR
0 31800.00	3308.30	5.90	3314.20	8364.0	8.45	1.11	3315.31	.00	4.45	8.00	150.00	3.00	0	.00
0 612.10	.00331					.00324	1.98		5.82			3.00		
0 32412.10	3310.33	5.82	3316.15	8364.0	8.58	1.14	3317.29	.00	4.45	8.00	150.00	3.00	0	.00
0 867.90	.00331					.00331	2.87		5.82			3.00		
0 33280.00	3313.20	5.82	3319.02	8364.0	8.58	1.14	3320.17	.00	4.45	8.00	150.00	3.00	0	.00
0JUNCT STR	.10000					.04172	.83					3.00		
0 33300.00	3315.20	4.86	3320.06	6909.0	8.65	1.16	3321.22	.00	3.93	8.00	150.00	3.00	0	.00
0 16.87	.01000					.00453	.08		3.76			3.00		
0 33316.87	3315.37	4.65	3320.02	6909.0	9.07	1.28	3321.29	.00	3.93	8.00	150.00	3.00	0	.00
0 3.13	.01000					.00494	.02		3.76			3.00		
0 33320.00	3315.40	4.61	3320.01	6909.0	11.20	1.95	3321.96	.00	4.51	7.00	120.00	3.00	0	.00
0 10.33	.00469					.00718	.07		5.33			3.00		
0 33330.33	3315.45	4.81	3320.26	6909.0	10.68	1.77	3322.03	.00	4.51	7.00	120.00	3.00	0	.00
0 33.22	.00469					.00620	.21		5.33			3.00		
0 33363.55	3315.60	5.02	3320.63	6909.0	10.18	1.61	3322.24	.00	4.51	7.00	120.00	3.00	0	.00
0 111.22	.00469					.00535	.60		5.33			3.00		
0 33474.77	3316.13	5.24	3321.37	6909.0	9.71	1.47	3322.83	.00	4.51	7.00	120.00	3.00	0	.00
0 247.95	.00469					.00483	1.20		5.33			3.00		
0 33722.71	3317.29	5.33	3322.62	6909.0	9.54	1.41	3324.03	.00	4.51	7.00	120.00	3.00	0	.00
0 8757.29	.00469					.00469	41.11		5.33			3.00		
0 42480.00	3358.40	5.33	3363.73	6909.0	9.54	1.41	3365.14	.00	4.51	7.00	120.00	3.00	0	.00
0JUNCT STR	.10000											3.00		

WATER SURFACE PROFILE LISTING

KINGMAN MASTER DRAINAGE PLAN
MOHAVE2 STA 31,800 - 50,400
Q100

0 STATION / 0 L/ELEM	INVERT ELEV / SO	DEPTH OF FLOW	W.S. ELEV	Q	VEL	VEL HEAD / SF AVE	ENERGY GRD.EL. / HF	SUPER ELEV	CRITICAL DEPTH / NORM DEPTH	HGT/ DIA	BASE/ ID NO.	ZL / ZR	NO PIER	AVBPR
0 42500.00	3360.40	1.72	3362.12	2144.0	9.97	1.55	3363.66	.00	2.11	7.00	120.00	3.00	0	.00
OJUNCT STR	.10000					.12654	.00					3.00		
0 42500.00	3360.40	1.72	3362.12	2144.0	9.97	1.55	3363.66	.00	2.11	7.00	120.00	3.00	0	.00
0 6.68	.02500					.02011	.13		1.63			3.00		
0 42506.67	3360.57	1.76	3362.33	2144.0	9.73	1.47	3363.80	.00	2.11	7.00	120.00	3.00	0	.00
0 7.33	.02500					.01795	.13		1.63			3.00		
0 42514.00	3360.75	1.84	3362.59	2144.0	9.28	1.34	3363.93	.00	2.11	7.00	120.00	3.00	0	.00
0 3.73	.02500					.01540	.06		1.63			3.00		
0 42517.73	3360.84	1.93	3362.77	2144.0	8.85	1.22	3363.99	.00	2.11	7.00	120.00	3.00	0	.00
0 1.77	.02500					.01321	.02		1.63			3.00		
0 42519.50	3360.89	2.02	3362.90	2144.0	8.44	1.11	3364.01	.00	2.11	7.00	120.00	3.00	0	.00
0 .50	.02500					.01133	.01		1.63			3.00		
0 42520.00	3360.90	2.11	3363.01	2144.0	8.04	1.00	3364.02	.00	2.11	7.00	120.00	3.00	0	.00
0 42520.00	3360.90	3.57	3364.47	2144.0	9.89	1.52	3365.99	.00	3.57	6.00	50.00	3.00	0	.00
0 3.09	.00567					.00864	.03		4.10			3.00		
0 42523.09	3360.92	3.72	3364.64	2144.0	9.43	1.38	3366.02	.00	3.57	6.00	50.00	3.00	0	.00
0 14.77	.00567					.00750	.11		4.10			3.00		
0 42537.87	3361.00	3.87	3364.87	2144.0	8.99	1.26	3366.13	.00	3.57	6.00	50.00	3.00	0	.00
0 52.15	.00567					.00651	.34		4.10			3.00		
0 42590.02	3361.30	4.03	3365.33	2144.0	8.57	1.14	3366.47	.00	3.57	6.00	50.00	3.00	0	.00
0 131.89	.00567					.00587	.77		4.10			3.00		
0 42721.91	3362.05	4.10	3366.15	2144.0	8.38	1.09	3367.24	.00	3.57	6.00	50.00	3.00	0	.00
0 7678.09	.00567					.00568	43.59		4.10			3.00		
0 50400.00	3405.60	4.10	3409.71	2144.0	8.38	1.09	3410.80	.00	3.57	6.00	50.00	3.00	0	.00
0 -.00	.00567					.00284	.00		4.10			3.00		
0 50400.00	3405.60	4.10	3409.70	2144.0	8.38	1.09	3410.80	.00	3.57	6.00	50.00	3.00	0	.00

WATER SURFACE PROFILE LISTING

KINGMAN MASTER DRAINAGE PLAN

LINE Ad

Q100

0 STATION	INVERT ELEV	DEPTH OF FLOW	W.S. ELEV	Q	VEL	VEL HEAD	ENERGY GRD.EL.	SUPER ELEV	CRITICAL DEPTH		HGT/ DIA	BASE/ ID NO.	ZL	NO PIER	AVBPR
0 L/ELEM	SO					SF AVE	HF			NORM DEPTH			ZR		
0 .00	3208.00	3.47	3211.47	6971.0	12.52	2.43	3213.91	.00	3.95		7.00	150.00	3.00	0	.00
0 2089.59	.01332					.01332	27.84			3.47			3.00		
0 2089.59	3235.83	3.47	3239.30	6971.0	12.52	2.43	3241.74	.00	3.95		7.00	150.00	3.00	0	.00
0 80.41	.01332					.01397	1.12			3.47			3.00		
0 2170.00	3236.90	3.38	3240.28	6971.0	12.89	2.58	3242.86	.00	3.95		7.00	150.00	3.00	0	.00
0 1636.77	.01461					.01462	23.93			3.38			3.00		
0 3806.77	3260.82	3.38	3264.19	6971.0	12.89	2.58	3266.78	.00	3.95		7.00	150.00	3.00	0	.00
0 115.23	.01461					.01460	1.68			3.38			3.00		
0 3922.00	3262.50	3.38	3265.88	6971.0	12.87	2.58	3268.46	.00	3.95		7.00	150.00	3.00	0	.00
0 .00	.01461					.01457	.00			3.38			3.00		
0 3922.00	3262.50	3.38	3265.88	6971.0	12.87	2.58	3268.46	.00	3.95		7.00	150.00	3.00	0	.00
0 2127.30	.01457					.01457	31.00			3.38			3.00		
0 6049.30	3293.49	3.38	3296.87	6971.0	12.87	2.58	3299.44	.00	3.95		7.00	150.00	3.00	0	.00
0 62.70	.01457					.01460	.92			3.38			3.00		
0 6112.00	3294.40	3.38	3297.78	6971.0	12.89	2.58	3300.36	.00	3.95		7.00	150.00	3.00	0	.00
0 1855.77	.01461					.01462	27.13			3.38			3.00		
0 7967.77	3321.52	3.38	3324.89	6971.0	12.89	2.58	3327.48	.00	3.95		7.00	150.00	3.00	0	.00
0 115.23	.01461					.01460	1.68			3.38			3.00		
0 8083.00	3323.20	3.38	3326.58	6971.0	12.87	2.58	3329.16	.00	3.95		7.00	150.00	3.00	0	.00
0 1917.31	.01456					.01457	27.94			3.38			3.00		
0 10000.31	3351.12	3.38	3354.50	6971.0	12.87	2.58	3357.08	.00	3.95		7.00	150.00	3.00	0	.00
0 53.69	.01456					.01460	.78			3.38			3.00		
0 10054.00	3351.90	3.38	3355.28	6971.0	12.89	2.58	3357.86	.00	3.95		7.00	150.00	3.00	0	.00
0 1855.77	.01461					.01462	27.13			3.38			3.00		
0 11909.77	3379.02	3.38	3382.39	6971.0	12.89	2.58	3384.98	.00	3.95		7.00	150.00	3.00	0	.00
0 115.23	.01461					.01460	1.68			3.38			3.00		
0 12025.00	3380.70	3.38	3384.08	6971.0	12.87	2.58	3386.66	.00	3.95		7.00	150.00	3.00	0	.00
0 2127.30	.01457					.01457	31.00			3.38			3.00		
0 14152.30	3411.69	3.38	3415.07	6971.0	12.87	2.58	3417.64	.00	3.95		7.00	150.00	3.00	0	.00
0 62.70	.01457					.01460	.92			3.38			3.00		
0 14215.00	3412.60	3.38	3415.98	6971.0	12.89	2.58	3418.56	.00	3.95		7.00	150.00	3.00	0	.00
0 1885.38	.01461					.01462	27.56			3.38			3.00		
0 16100.38	3440.15	3.38	3443.53	6971.0	12.89	2.58	3446.11	.00	3.95		7.00	150.00	3.00	0	.00
0 85.62	.01461					.01435	1.23			3.38			3.00		

WATER SURFACE PROFILE LISTING

KINGMAN MASTER DRAINAGE PLAN

LINE Ad

Q100

O STATION / O L/ELEM	INVERT ELEV / SO	DEPTH OF FLOW	W.S. ELEV	Q	VEL	VEL HEAD / SF AVE	ENERGY GRD.EL. / HF	SUPER ELEV	CRITICAL DEPTH / NORM DEPTH	HGT/ DIA	BASE/ ID NO.	ZL / ZR	NO PIER	AVBPR
0 16186.00	3441.40	3.41	3444.81	6971.0	12.74	2.52	3447.34	.00	3.95	7.00	150.00	3.00	0	.00
0 2065.40	.01408					.01409	29.10		3.41			3.00		
0 18251.40	3470.49	3.41	3473.90	6971.0	12.74	2.52	3476.43	.00	3.95	7.00	150.00	3.00	0	.00
0 82.11	.01408					.01385	1.14		3.41			3.00		
0 18333.51	3471.65	3.45	3475.10	6971.0	12.60	2.47	3477.56	.00	3.95	7.00	150.00	3.00	0	.00
0 46.49	.01408					.01265	.59		3.41			3.00		
0 18380.00	3472.30	3.61	3475.91	6971.0	12.01	2.24	3478.15	.00	3.95	7.00	150.00	3.00	0	.00
OJUNCT STR	.15000					.11351	2.27					3.00		
0 18400.00	3475.30	3.73	3479.03	6374.0	10.60	1.75	3480.78	.00	3.73	7.00	150.00	3.00	0	.00
0 12.32	.00786					.00830	.10		3.85			3.00		
0 18412.32	3475.40	3.85	3479.25	6374.0	10.25	1.63	3480.88	.00	3.73	7.00	150.00	3.00	0	.00
0 5167.68	.00786					.00786	40.62		3.85			3.00		
0 23580.00	3516.00	3.85	3519.85	6374.0	10.25	1.63	3521.48	.00	3.73	7.00	150.00	3.00	0	.00
OJUNCT STR	.15500											3.00		
0 23600.00	3519.10	3.12	3522.22	5722.0	11.52	2.06	3524.28	.00	3.48	7.00	150.00	3.00	0	.00
0 1075.41	.01292					.01292	13.89		3.12			3.00		
0 24675.41	3532.99	3.12	3536.11	5722.0	11.52	2.06	3538.17	.00	3.48	7.00	150.00	3.00	0	.00
0 60.15	.01292					.01334	.80		3.12			3.00		
0 24735.56	3533.77	3.06	3536.83	5722.0	11.75	2.15	3538.97	.00	3.48	7.00	150.00	3.00	0	.00
0 40.31	.01292					.01489	.60		3.12			3.00		
0 24775.87	3534.29	2.92	3537.21	5722.0	12.32	2.36	3539.57	.00	3.48	7.00	150.00	3.00	0	.00
0 24.13	.01292					.01734	.42		3.12			3.00		
0 24800.00	3534.60	2.80	3537.39	5722.0	12.93	2.60	3539.99	.00	3.48	7.00	150.00	3.00	0	.00
0 1943.63	.01865					.01866	36.27		2.80			3.00		
0 26743.63	3570.85	2.80	3573.64	5722.0	12.93	2.60	3576.24	.00	3.48	7.00	150.00	3.00	0	.00
0 56.37	.01865					.01868	1.05		2.80			3.00		
0 26800.00	3571.90	2.79	3574.69	5722.0	12.94	2.60	3577.29	.00	3.48	7.00	150.00	3.00	0	.00
0 1000.00	.01870					.01871	18.71		2.79			3.00		
0 27800.00	3590.60	2.79	3593.39	5722.0	12.94	2.60	3595.99	.00	3.48	7.00	150.00	3.00	0	.00
0 900.48	.01870					.01871	16.84		2.79			3.00		
0 28700.48	3607.44	2.79	3610.23	5722.0	12.94	2.60	3612.83	.00	3.48	7.00	150.00	3.00	0	.00
0 99.52	.01870					.01866	1.86		2.79			3.00		
0 28800.00	3609.30	2.80	3612.10	5722.0	12.92	2.59	3614.69	.00	3.48	7.00	150.00	3.00	0	.00
0 937.84	.01860					.01862	17.46		2.80			3.00		

WATER SURFACE PROFILE LISTING

KINGMAN MASTER DRAINAGE PLAN

LINE Ad

Q100

0 STATION / 0 L/ELEM	INVERT ELEV / SO	DEPTH OF FLOW	W.S. ELEV	Q	VEL	VEL HEAD / SF AVE	ENERGY GRD.EL. / HF	SUPER ELEV	CRITICAL DEPTH / NORM DEPTH	HGT/ DIA	BASE/ ID NO.	ZL / ZR	NO PIER	AVBPR
0 29737.84	3626.74	2.80	3629.54	5722.0	12.92	2.59	3632.13	.00	3.48	7.00	150.00	3.00	0	.00
0 62.16	.01860					.01866	1.16		2.80			3.00		
0 29800.00	3627.90	2.79	3630.69	5722.0	12.94	2.60	3633.29	.00	3.48	7.00	150.00	3.00	0	.00
0 913.30	.01870					.01871	17.08		2.79			3.00		
0 30713.30	3644.98	2.79	3647.77	5722.0	12.94	2.60	3650.37	.00	3.48	7.00	150.00	3.00	0	.00
0 86.70	.01870					.01966	1.70		2.79			3.00		
0 30800.00	3646.60	2.71	3649.31	5722.0	13.33	2.76	3652.08	.00	3.48	7.00	150.00	3.00	0	.00
0 .00	.01870					.02060	.00		2.79			3.00		
0 30800.00	3646.60	2.71	3649.31	5722.0	13.33	2.76	3652.08	.00	3.48	7.00	150.00	3.00	0	.00
0 367.45	.02060					.02060	7.57		2.71			3.00		
0 31167.46	3654.17	2.71	3656.88	5722.0	13.33	2.76	3659.65	.00	3.48	7.00	150.00	3.00	0	.00
0 90.65	.02060					.02179	1.98		2.71			3.00		
0 31258.11	3656.04	2.63	3658.66	5722.0	13.79	2.96	3661.62	.00	3.48	7.00	150.00	3.00	0	.00
0 41.89	.02060					.02487	1.04		2.71			3.00		
0 31300.00	3656.90	2.51	3659.41	5722.0	14.47	3.25	3662.66	.00	3.48	7.00	150.00	3.00	0	.00
0 641.35	.02675					.02677	17.17		2.51			3.00		
0 31941.35	3674.06	2.51	3676.57	5722.0	14.47	3.25	3679.82	.00	3.48	7.00	150.00	3.00	0	.00
0 1358.65	.02675					.02675	36.35		2.51			3.00		
0 33300.00	3710.40	2.51	3712.91	5722.0	14.46	3.25	3716.16	.00	3.48	7.00	150.00	3.00	0	.00
0 2000.00	.02670					.02673	53.47		2.51			3.00		
0 35300.00	3763.80	2.51	3766.31	5722.0	14.46	3.25	3769.56	.00	3.48	7.00	150.00	3.00	0	.00
0 2000.00	.02670					.02673	53.47		2.51			3.00		
0 37300.00	3817.20	2.51	3819.71	5722.0	14.46	3.25	3822.96	.00	3.48	7.00	150.00	3.00	0	.00
0 -.00	.02670					.02673	.00		2.51			3.00		
0 37300.00	3817.20	2.51	3819.71	5722.0	14.46	3.25	3822.96	.00	3.48	7.00	150.00	3.00	0	.00
0 1792.14	.02670					.02673	47.91		2.51			3.00		
0 39092.14	3865.05	2.51	3867.56	5722.0	14.46	3.25	3870.81	.00	3.48	7.00	150.00	3.00	0	.00
0 109.19	.02670					.02647	2.89		2.51			3.00		
0 39201.33	3867.97	2.53	3870.49	5722.0	14.37	3.21	3873.70	.00	3.48	7.00	150.00	3.00	0	.00
0 74.09	.02670					.02435	1.80		2.51			3.00		
0 39275.42	3869.94	2.64	3872.59	5722.0	13.70	2.92	3875.51	.00	3.48	7.00	150.00	3.00	0	.00
0 24.58	.02670					.02090	.51		2.51			3.00		
0 39300.00	3870.60	2.77	3873.37	5722.0	13.06	2.65	3876.02	.00	3.48	7.00	150.00	3.00	0	.00
0 .00	.02670					.01931	.00		2.51			3.00		

WATER SURFACE PROFILE LISTING

KINGMAN MASTER DRAINAGE PLAN

LINE Ad

Q100

0 STATION / L/ELEM	INVERT ELEV / SO	DEPTH OF FLOW	W.S. ELEV	Q	VEL	VEL HEAD / SF AVE	ENERGY GRD.EL. / HF	SUPER ELEV	CRITICAL DEPTH / NORM DEPTH		HGT/ DIA	BASE/ ID NO.	ZL / ZR	NO PIER	AVBPR
0 39300.00	3870.60	2.77	3873.37	5722.0	13.06	2.65	3876.02	.00	3.48		7.00	150.00	3.00	0	.00
0 69.29	.01929					.01931	1.34			2.77			3.00		
0 39369.30	3871.94	2.77	3874.70	5722.0	13.06	2.65	3877.36	.00	3.48		7.00	150.00	3.00	0	.00
0 104.55	.01929					.01919	2.01			2.77			3.00		
0 39473.84	3873.95	2.78	3876.73	5722.0	13.01	2.63	3879.36	.00	3.48		7.00	150.00	3.00	0	.00
0 70.99	.01929					.01772	1.26			2.77			3.00		
0 39544.83	3875.32	2.91	3878.23	5722.0	12.41	2.39	3880.62	.00	3.48		7.00	150.00	3.00	0	.00
0 20.53	.01929					.01522	.31			2.77			3.00		
0 39565.36	3875.72	3.04	3878.76	5722.0	11.83	2.18	3880.93	.00	3.48		7.00	150.00	3.00	0	.00
0 9.30	.01929					.01307	.12			2.77			3.00		
0 39574.66	3875.90	3.18	3879.08	5722.0	11.28	1.98	3881.05	.00	3.48		7.00	150.00	3.00	0	.00
0 4.19	.01929					.01123	.05			2.77			3.00		
0 39578.85	3875.98	3.33	3879.30	5722.0	10.76	1.80	3881.10	.00	3.48		7.00	150.00	3.00	0	.00
0 1.15	.01929					.00965	.01			2.77			3.00		
0 39580.00	3876.00	3.48	3879.48	5722.0	10.25	1.63	3881.11	.00	3.48		7.00	150.00	3.00	0	.00
0JUNCT STR	.20501					.07159	1.43						3.00		
0 39600.00	3880.10	3.10	3883.20	3139.0	6.36	.63	3883.83	.00	2.35		7.00	150.00	3.00	0	.00
0 39600.00	3880.10	3.29	3883.39	3139.0	10.62	1.75	3885.14	.00	3.47		7.00	80.00	3.00	0	.00
0 1854.62	.01095					.01095	20.31			3.29			3.00		
0 41454.62	3900.41	3.29	3903.70	3139.0	10.62	1.75	3905.45	.00	3.47		7.00	80.00	3.00	0	.00
0 39.46	.01095					.01157	.46			3.29			3.00		
0 41494.08	3900.84	3.19	3904.03	3139.0	10.99	1.88	3905.91	.00	3.47		7.00	80.00	3.00	0	.00
0 24.18	.01095					.01315	.32			3.29			3.00		
0 41518.26	3901.10	3.05	3904.16	3139.0	11.53	2.07	3906.22	.00	3.47		7.00	80.00	3.00	0	.00
0 17.98	.01095					.01524	.27			3.29			3.00		
0 41536.25	3901.30	2.92	3904.23	3139.0	12.09	2.27	3906.50	.00	3.47		7.00	80.00	3.00	0	.00
0 15.30	.01095					.01767	.27			3.29			3.00		
0 41551.55	3901.47	2.80	3904.27	3139.0	12.68	2.50	3906.77	.00	3.47		7.00	80.00	3.00	0	.00
0 13.67	.01095					.02050	.28			3.29			3.00		
0 41565.22	3901.62	2.68	3904.30	3139.0	13.30	2.75	3907.05	.00	3.47		7.00	80.00	3.00	0	.00
0 12.48	.01095					.02379	.30			3.29			3.00		
0 41577.70	3901.76	2.57	3904.32	3139.0	13.95	3.02	3907.35	.00	3.47		7.00	80.00	3.00	0	.00
0 11.54	.01095					.02761	.32			3.29			3.00		
0 41589.25	3901.88	2.46	3904.34	3139.0	14.63	3.33	3907.67	.00	3.47		7.00	80.00	3.00	0	.00
0 10.75	.01095					.03205	.34			3.29			3.00		
0 41600.00	3902.00	2.35	3904.35	3139.0	15.34	3.66	3908.01	.00	3.47		7.00	80.00	3.00	0	.00

WATER SURFACE PROFILE LISTING

KINGMAN MASTER DRAINAGE PLAN

LINE Ad46

Q100

O	STATION	INVERT ELEV	DEPTH OF FLOW	W.S. ELEV	Q	VEL	VEL HEAD	ENERGY GRD.EL.	SUPER ELEV	CRITICAL DEPTH		HGT/ DIA	BASE/ ID NO.	ZL	NO PIER	AVBPR
O	L/ELEM	SO					SF AVE	HF			NORM DEPTH			ZR		
0	.00	3880.00	1.99	3881.99	1018.0	15.04	3.51	3885.51	.00	3.07		7.00	30.00	2.00	0	.00
0	.00	3880.00	1.99	3881.99	1018.0	15.04	3.51	3885.51	.00	3.07		7.00	30.00	2.00	0	.00
0	1853.03	.04400					.04404	81.61			1.99			2.00		
0	1853.03	3961.53	1.99	3963.53	1018.0	15.04	3.51	3967.04	.00	3.07		7.00	30.00	2.00	0	.00
0	79.43	.04400					.04162	3.31			1.99			2.00		
0	1932.46	3965.03	2.06	3967.09	1018.0	14.47	3.26	3970.35	.00	3.07		7.00	30.00	2.00	0	.00
0	27.70	.04400					.03654	1.01			1.99			2.00		
0	1960.16	3966.25	2.15	3968.40	1018.0	13.80	2.96	3971.36	.00	3.07		7.00	30.00	2.00	0	.00
0	14.22	.04400					.03160	.45			1.99			2.00		
0	1974.37	3966.87	2.24	3969.12	1018.0	13.16	2.69	3971.81	.00	3.07		7.00	30.00	2.00	0	.00
0	8.90	.04400					.02734	.24			1.99			2.00		
0	1983.27	3967.26	2.34	3969.60	1018.0	12.55	2.45	3972.05	.00	3.07		7.00	30.00	2.00	0	.00
0	6.01	.04400					.02367	.14			1.99			2.00		
0	1989.28	3967.53	2.44	3969.97	1018.0	11.96	2.22	3972.19	.00	3.07		7.00	30.00	2.00	0	.00
0	4.18	.04400					.02049	.09			1.99			2.00		
0	1993.46	3967.71	2.54	3970.26	1018.0	11.41	2.02	3972.28	.00	3.07		7.00	30.00	2.00	0	.00
0	2.89	.04400					.01775	.05			1.99			2.00		
0	1996.36	3967.84	2.65	3970.49	1018.0	10.87	1.84	3972.33	.00	3.07		7.00	30.00	2.00	0	.00
0	1.93	.04400					.01538	.03			1.99			2.00		
0	1998.28	3967.92	2.76	3970.69	1018.0	10.37	1.67	3972.36	.00	3.07		7.00	30.00	2.00	0	.00
0	1.17	.04400					.01334	.02			1.99			2.00		
0	1999.45	3967.98	2.88	3970.86	1018.0	9.89	1.52	3972.37	.00	3.07		7.00	30.00	2.00	0	.00
0	.55	.04400					.01156	.01			1.99			2.00		
0	2000.00	3968.00	3.00	3971.00	1018.0	9.43	1.38	3972.38	.00	3.07		7.00	30.00	2.00	0	.00
1																

WATER SURFACE PROFILE LISTING

KINGMAN MASTER DRAINAGE PLAN

LINE Ae

Q100

O	STATION	INVERT ELEV	DEPTH OF FLOW	W.S. ELEV	Q	VEL	VEL HEAD	ENERGY GRD.EL.	SUPER ELEV	CRITICAL DEPTH		HGT/ DIA	BASE/ ID NO.	ZL	NO PIER	AVBPR
O	L/ELEM	SO					SF AVE	HF			NORM DEPTH			ZR		
0	.00	3215.00	4.18	3219.18	9996.0	11.27	1.97	3221.15	.00	4.18		7.00	200.00	3.00	0	.00
0	5.53	.00550					.00778	.04			4.73			3.00		
0	5.53	3215.03	4.37	3219.40	9996.0	10.74	1.79	3221.19	.00	4.18		7.00	200.00	3.00	0	.00
0	31.36	.00550					.00669	.21			4.73			3.00		
0	36.88	3215.20	4.57	3219.77	9996.0	10.24	1.63	3221.40	.00	4.18		7.00	200.00	3.00	0	.00
0	130.10	.00550					.00584	.76			4.73			3.00		
0	166.98	3215.92	4.73	3220.65	9996.0	9.87	1.52	3222.16	.00	4.18		7.00	200.00	3.00	0	.00
0	1833.02	.00550					.00550	10.09			4.73			3.00		
0	2000.00	3226.00	4.73	3230.73	9996.0	9.87	1.52	3232.24	.00	4.18		7.00	200.00	3.00	0	.00
0	35.80	.00750					.00595	.21			4.31			3.00		
0	2035.80	3226.27	4.52	3230.79	9996.0	10.36	1.67	3232.46	.00	4.18		7.00	200.00	3.00	0	.00
0	55.18	.00750					.00693	.38			4.31			3.00		
0	2090.99	3226.68	4.32	3231.00	9996.0	10.86	1.83	3232.84	.00	4.18		7.00	200.00	3.00	0	.00
0	35.17	.00750					.00748	.26			4.31			3.00		
0	2126.16	3226.95	4.31	3231.26	9996.0	10.88	1.84	3233.10	.00	4.18		7.00	200.00	3.00	0	.00
0	1113.84	.00750					.00750	8.36			4.31			3.00		
0	3240.00	3235.30	4.31	3239.61	9996.0	10.88	1.84	3241.45	.00	4.18		7.00	200.00	3.00	0	.00
0	.00	.00750					.00750	.00			4.31			3.00		
0	3240.00	3235.30	4.31	3239.61	9996.0	10.88	1.84	3241.45	.00	4.18		7.00	200.00	3.00	0	.00
0	2.93	.00905					.00762	.02			4.08			3.00		
0	3242.93	3235.33	4.27	3239.60	9996.0	10.99	1.88	3241.48	.00	4.18		7.00	200.00	3.00	0	.00
O	HYDRAULIC JUMP													3.00		
0	3242.93	3235.33	4.08	3239.41	9996.0	11.54	2.07	3241.48	.00	4.18		7.00	200.00	3.00	0	.00
0	609.44	.00905					.00905	5.51			4.08			3.00		
0	3852.37	3240.84	4.08	3244.92	9996.0	11.54	2.07	3246.99	.00	4.18		7.00	200.00	3.00	0	.00
0	17.63	.00905					.00897	.16			4.08			3.00		
0	3870.00	3241.00	4.10	3245.10	9996.0	11.48	2.05	3247.15	.00	4.18		7.00	200.00	3.00	0	.00
0	538.63	.00889					.00889	4.79			4.10			3.00		
0	4408.63	3245.79	4.10	3249.89	9996.0	11.48	2.05	3251.94	.00	4.18		7.00	200.00	3.00	0	.00
0	29.59	.00889					.00947	.28			4.10			3.00		
0	4438.22	3246.05	3.95	3250.01	9996.0	11.93	2.21	3252.22	.00	4.18		7.00	200.00	3.00	0	.00
0	23.38	.00889					.01088	.25			4.10			3.00		
0	4461.60	3246.26	3.78	3250.04	9996.0	12.51	2.43	3252.47	.00	4.18		7.00	200.00	3.00	0	.00
0	20.10	.00889					.01267	.25			4.10			3.00		

WATER SURFACE PROFILE LISTING

KINGMAN MASTER DRAINAGE PLAN

LINE Ae

Q100

O	STATION	INVERT ELEV	DEPTH OF FLOW	W.S. ELEV	Q	VEL	VEL HEAD	ENERGY GRD.EL.	SUPER ELEV	CRITICAL DEPTH		HGT/ DIA	BASE/ ID NO.	ZL	NO PIER	AVBPR
O	L/ELEM	SO					SF AVE	HF			NORM DEPTH			ZR		
0	4481.70	3246.44	3.61	3250.05	9996.0	13.13	2.68	3252.73	.00	4.18		7.00	200.00	3.00	0	.00
0	18.30	.00889					.01476	.27			4.10			3.00		
0	4500.00	3246.60	3.45	3250.05	9996.0	13.77	2.95	3253.00	.00	4.18		7.00	200.00	3.00	0	.00
0	1031.51	.01588					.01589	16.39			3.45			3.00		
0	5531.51	3262.98	3.45	3266.43	9996.0	13.77	2.95	3269.38	.00	4.18		7.00	200.00	3.00	0	.00
0	114.49	.01588					.01581	1.81			3.45			3.00		
0	5646.00	3264.80	3.46	3268.26	9996.0	13.72	2.93	3271.19	.00	4.18		7.00	200.00	3.00	0	.00
0	283.23	.01571					.01572	4.45			3.46			3.00		
0	5929.23	3269.25	3.46	3272.71	9996.0	13.72	2.93	3275.64	.00	4.18		7.00	200.00	3.00	0	.00
0	98.77	.01571					.01607	1.59			3.46			3.00		
0	6028.00	3270.80	3.42	3274.22	9996.0	13.91	3.01	3277.22	.00	4.18		7.00	200.00	3.00	0	.00
0	148.90	.01640					.01641	2.44			3.42			3.00		
0	6176.90	3273.24	3.42	3276.66	9996.0	13.91	3.01	3279.67	.00	4.18		7.00	200.00	3.00	0	.00
0	97.25	.01640					.01660	1.61			3.42			3.00		
0	6274.14	3274.84	3.40	3278.23	9996.0	14.01	3.05	3281.28	.00	4.18		7.00	200.00	3.00	0	.00
0	86.10	.01640					.01818	1.57			3.42			3.00		
0	6360.24	3276.25	3.24	3279.49	9996.0	14.69	3.35	3282.85	.00	4.18		7.00	200.00	3.00	0	.00
0	39.76	.01640					.02119	.84			3.42			3.00		
0	6400.00	3276.90	3.10	3280.00	9996.0	15.41	3.69	3283.69	.00	4.18		7.00	200.00	3.00	0	.00
1																

WATER SURFACE PROFILE LISTING

KINGMAN MASTER DRAINAGE PLAN

LINE Af

Q100

O	STATION	INVERT ELEV	DEPTH OF FLOW	W.S. ELEV	Q	VEL	VEL HEAD	ENERGY GRD.EL.	SUPER ELEV	CRITICAL DEPTH		HGT/ DIA	BASE/ ID NO.	ZL	NO PIER	AVBPR
O	L/ELEM	SO					SF AVE	HF			NORM DEPTH			ZR		
0	.00	3235.00	4.60	3239.60	14402.0	11.86	2.19	3241.79	.00	4.60		8.00	250.00	3.00	0	.00
0	3.98	.00396					.00751	.03			5.68			3.00		
0	3.98	3235.02	4.81	3239.83	14402.0	11.31	1.99	3241.82	.00	4.60		8.00	250.00	3.00	0	.00
0	16.70	.00396					.00645	.11			5.68			3.00		
0	20.68	3235.08	5.04	3240.12	14402.0	10.78	1.81	3241.93	.00	4.60		8.00	250.00	3.00	0	.00
0	42.90	.00396					.00554	.24			5.68			3.00		
0	63.58	3235.25	5.27	3240.52	14402.0	10.28	1.64	3242.16	.00	4.60		8.00	250.00	3.00	0	.00
0	116.19	.00396					.00476	.55			5.68			3.00		
0	179.77	3235.71	5.51	3241.22	14402.0	9.80	1.49	3242.72	.00	4.60		8.00	250.00	3.00	0	.00
0	356.76	.00396					.00418	1.49			5.68			3.00		
0	536.53	3237.12	5.68	3242.81	14402.0	9.49	1.40	3244.21	.00	4.60		8.00	250.00	3.00	0	.00
0	347.47	.00396					.00396	1.38			5.68			3.00		
0	884.00	3238.50	5.68	3244.19	14402.0	9.49	1.40	3245.58	.00	4.60		8.00	250.00	3.00	0	.00
0	57.28	.00619					.00428	.25			4.98			3.00		
0	941.28	3238.85	5.44	3244.29	14402.0	9.95	1.54	3245.83	.00	4.60		8.00	250.00	3.00	0	.00
0	70.35	.00619					.00498	.35			4.98			3.00		
0	1011.62	3239.29	5.20	3244.49	14402.0	10.43	1.69	3246.18	.00	4.60		8.00	250.00	3.00	0	.00
0	137.82	.00619					.00578	.80			4.98			3.00		
0	1149.44	3240.14	4.98	3245.12	14402.0	10.92	1.85	3246.98	.00	4.60		8.00	250.00	3.00	0	.00
0	638.56	.00619					.00619	3.96			4.98			3.00		
0	1788.00	3244.10	4.98	3249.08	14402.0	10.92	1.85	3250.93	.00	4.60		8.00	250.00	3.00	0	.00
0	100.17	.00608					.00614	.62			5.01			3.00		
0	1888.17	3244.71	5.01	3249.71	14402.0	10.86	1.83	3251.55	.00	4.60		8.00	250.00	3.00	0	.00
0	803.83	.00608					.00609	4.89			5.01			3.00		
0	2692.00	3249.60	5.01	3254.60	14402.0	10.86	1.83	3256.44	.00	4.60		8.00	250.00	3.00	0	.00
0	48.34	.00737					.00659	.32			4.73			3.00		
0	2740.34	3249.96	4.78	3254.74	14402.0	11.39	2.02	3256.76	.00	4.60		8.00	250.00	3.00	0	.00
0	37.90	.00737					.00723	.27			4.73			3.00		
0	2778.24	3250.24	4.73	3254.96	14402.0	11.53	2.07	3257.03	.00	4.60		8.00	250.00	3.00	0	.00
0	2160.13	.00737					.00737	15.92			4.73			3.00		
0	4938.36	3266.15	4.73	3270.88	14402.0	11.53	2.07	3272.95	.00	4.60		8.00	250.00	3.00	0	.00
OHYDRAULIC JUMP														3.00		
0	4938.36	3266.15	4.48	3270.63	14402.0	12.21	2.32	3272.95	.00	4.60		8.00	250.00	3.00	0	.00
0	1.42	.00737					.00892	.01			4.73			3.00		

WATER SURFACE PROFILE LISTING

KINGMAN MASTER DRAINAGE PLAN
LINE Af
Q100

O	STATION	INVERT ELEV	DEPTH OF FLOW	W.S. ELEV	Q	VEL	VEL HEAD	ENERGY GRD.EL.	SUPER ELEV	CRITICAL DEPTH		HGT/ DIA	BASE/ ID NO.	ZL	NO PIER	AVBPR
O	L/ELEM	SO					SF AVE	HF			NORM DEPTH			ZR		
0	1128.69	.01000					.01000	11.29			4.32			3.00		
0	7928.69	3302.59	4.32	3306.91	14402.0	12.68	2.50	3309.41	.00	4.60		8.00	250.00	3.00	0	.00
0	57.86	.01000					.01019	.59			4.32			3.00		
0	7986.54	3303.17	4.27	3307.44	14402.0	12.82	2.56	3309.99	.00	4.60		8.00	250.00	3.00	0	.00
0	53.46	.01000					.01123	.60			4.32			3.00		
0	8040.00	3303.70	4.08	3307.78	14402.0	13.45	2.81	3310.59	.00	4.60		8.00	250.00	3.00	0	.00
0	.00	.01000					.01209	.00			4.32			3.00		
0	8040.00	3303.70	4.08	3307.78	14402.0	13.45	2.81	3310.60	.00	4.60		8.00	250.00	3.00	0	.00
0	882.72	.01208					.01209	10.67			4.08			3.00		
0	8922.72	3314.36	4.08	3318.44	14402.0	13.45	2.81	3321.25	.00	4.60		8.00	250.00	3.00	0	.00
0	61.28	.01208					.01210	.74			4.08			3.00		
0	8984.00	3315.10	4.08	3319.18	14402.0	13.46	2.82	3322.00	.00	4.60		8.00	250.00	3.00	0	.00
0	1107.23	.01212					.01212	13.43			4.08			3.00		
0	4939.78	3266.16	4.46	3270.62	14402.0	12.26	2.34	3272.96	.00	4.60		8.00	250.00	3.00	0	.00
0	15.17	.00737					.00971	.15			4.73			3.00		
0	4954.95	3266.27	4.26	3270.54	14402.0	12.86	2.57	3273.11	.00	4.60		8.00	250.00	3.00	0	.00
0	17.05	.00737					.01132	.19			4.73			3.00		
0	4972.00	3266.40	4.07	3270.47	14402.0	13.48	2.83	3273.30	.00	4.60		8.00	250.00	3.00	0	.00
0	789.28	.01218					.01219	9.62			4.07			3.00		
0	5761.28	3276.02	4.07	3280.09	14402.0	13.48	2.83	3282.91	.00	4.60		8.00	250.00	3.00	0	.00
0	93.83	.01218					.01260	1.18			4.07			3.00		
0	5855.11	3277.16	3.99	3281.15	14402.0	13.76	2.94	3284.10	.00	4.60		8.00	250.00	3.00	0	.00
0	60.89	.01218					.01409	.86			4.07			3.00		
0	5916.00	3277.90	3.82	3281.72	14402.0	14.44	3.24	3284.95	.00	4.60		8.00	250.00	3.00	0	.00
0	722.81	.01516					.01517	10.97			3.82			3.00		
0	6638.81	3288.86	3.82	3292.67	14402.0	14.44	3.24	3295.91	.00	4.60		8.00	250.00	3.00	0	.00
0	111.87	.01516					.01438	1.61			3.82			3.00		
0	6750.68	3290.55	3.94	3294.50	14402.0	13.95	3.02	3297.52	.00	4.60		8.00	250.00	3.00	0	.00
0	35.93	.01516					.01262	.45			3.82			3.00		
0	6786.61	3291.10	4.13	3295.22	14402.0	13.30	2.75	3297.97	.00	4.60		8.00	250.00	3.00	0	.00
0	13.39	.01516					.01083	.15			3.82			3.00		
0	6800.00	3291.30	4.32	3295.62	14402.0	12.68	2.50	3298.12	.00	4.60		8.00	250.00	3.00	0	.00
0	10091.23	3328.52	4.08	3332.60	14402.0	13.46	2.82	3335.41	.00	4.60		8.00	250.00	3.00	0	.00
0	72.77	.01212					.01216	.88			4.08			3.00		

WATER SURFACE PROFILE LISTING

KINGMAN MASTER DRAINAGE PLAN

LINE Af

Q100

O STATION	INVERT ELEV	DEPTH OF FLOW	W.S. ELEV	Q	VEL	VEL HEAD	ENERGY GRD.EL.	SUPER ELEV	CRITICAL DEPTH		HGT/ DIA	BASE/ ID NO.	ZL	NO PIER	AVBPR
O L/ELEM	SO					SF AVE	HF			NORM DEPTH			ZR		
0 10164.00	3329.40	4.07	3333.47	14402.0	13.48	2.83	3336.30	.00	4.60		8.00	250.00	3.00	0	.00
0 848.73	.01218					.01219	10.34			4.07			3.00		
0 11012.73	3339.74	4.07	3343.81	14402.0	13.48	2.83	3346.64	.00	4.60		8.00	250.00	3.00	0	.00
0 95.27	.01218					.01214	1.16			4.07			3.00		
0 11108.00	3340.90	4.08	3344.98	14402.0	13.45	2.81	3347.80	.00	4.60		8.00	250.00	3.00	0	.00
0 868.32	.01208					.01209	10.49			4.08			3.00		
0 11976.32	3351.39	4.08	3355.47	14402.0	13.45	2.81	3358.28	.00	4.60		8.00	250.00	3.00	0	.00
0 75.68	.01208					.01214	.92			4.08			3.00		
0 12052.00	3352.30	4.07	3356.37	14402.0	13.48	2.83	3359.20	.00	4.60		8.00	250.00	3.00	0	.00
0 844.06	.01218					.01219	10.28			4.07			3.00		
0 12896.06	3362.58	4.07	3366.66	14402.0	13.48	2.83	3369.48	.00	4.60		8.00	250.00	3.00	0	.00
0 99.94	.01218					.01216	1.21			4.07			3.00		
0 12996.00	3363.80	4.08	3367.88	14402.0	13.46	2.82	3370.70	.00	4.60		8.00	250.00	3.00	0	.00
0 1105.21	.01212					.01212	13.40			4.08			3.00		
0 14101.21	3377.19	4.08	3381.27	14402.0	13.46	2.82	3384.09	.00	4.60		8.00	250.00	3.00	0	.00
0 74.79	.01212					.01216	.91			4.08			3.00		
0 14176.00	3378.10	4.07	3382.17	14402.0	13.48	2.83	3385.00	.00	4.60		8.00	250.00	3.00	0	.00
0 848.73	.01218					.01219	10.34			4.07			3.00		
0 15024.73	3388.44	4.07	3392.51	14402.0	13.48	2.83	3395.34	.00	4.60		8.00	250.00	3.00	0	.00
0 95.27	.01218					.01214	1.16			4.07			3.00		
0 15120.00	3389.60	4.08	3393.68	14402.0	13.45	2.81	3396.50	.00	4.60		8.00	250.00	3.00	0	.00
0 868.32	.01208					.01209	10.49			4.08			3.00		
0 15988.32	3400.09	4.08	3404.17	14402.0	13.45	2.81	3406.98	.00	4.60		8.00	250.00	3.00	0	.00
0 75.68	.01208					.01214	.92			4.08			3.00		
0 16064.00	3401.00	4.07	3405.07	14402.0	13.48	2.83	3407.90	.00	4.60		8.00	250.00	3.00	0	.00
0 .00	.01208					.01219	.00			4.08			3.00		
0 16064.00	3401.00	4.07	3405.07	14402.0	13.48	2.83	3407.90	.00	4.60		8.00	250.00	3.00	0	.00
0 815.29	.01218					.01219	9.93			4.07			3.00		
0 16879.29	3410.93	4.07	3415.00	14402.0	13.48	2.83	3417.83	.00	4.60		8.00	250.00	3.00	0	.00
0 87.35	.01218					.01190	1.04			4.07			3.00		
0 16966.64	3412.00	4.13	3416.13	14402.0	13.29	2.74	3418.87	.00	4.60		8.00	250.00	3.00	0	.00
0 41.36	.01218					.01080	.45			4.07			3.00		
0 17008.00	3412.50	4.32	3416.82	14402.0	12.67	2.49	3419.32	.00	4.60		8.00	250.00	3.00	0	.00
0 510.42	.00996					.00997	5.09			4.32			3.00		

WATER SURFACE PROFILE LISTING

KINGMAN MASTER DRAINAGE PLAN

LINE Af

Q100

O STATION / O L/ELEM	INVERT ELEV / SO	DEPTH OF FLOW	W.S. ELEV	Q	VEL	VEL HEAD / SF AVE	ENERGY GRD.EL. / HF	SUPER ELEV	CRITICAL DEPTH / NORM DEPTH		HGT/ DIA	BASE/ ID NO.	ZL / ZR	NO PIER	AVBPR
0 17518.42	3417.59	4.32	3421.91	14402.0	12.67	2.49	3424.40	.00	4.60		8.00	250.00	3.00	0	.00
0 49.30	.00996					.00969	.48			4.32			3.00		
0 17567.73	3418.08	4.40	3422.47	14402.0	12.44	2.41	3424.88	.00	4.60		8.00	250.00	3.00	0	.00
0 12.27	.00996					.00875	.11			4.32			3.00		
0 17580.00	3418.20	4.60	3422.80	14402.0	11.86	2.19	3424.99	.00	4.60		8.00	250.00	3.00	0	.00
OJUNCT STR	.10000												3.00		
0 17600.00	3420.20	.58	3420.78	622.0	4.29	.29	3421.06	.00	.58		8.00	250.00	3.00	0	.00
0 17600.00	3420.20	2.70	3422.90	622.0	8.21	1.05	3423.94	.00	2.70		5.00	20.00	3.00	0	.00
0 2.84	.00776					.00991	.03			2.93			3.00		
0 17602.84	3420.22	2.80	3423.02	622.0	7.83	.95	3423.97	.00	2.70		5.00	20.00	3.00	0	.00
0 20.05	.00776					.00866	.17			2.93			3.00		
0 17622.89	3420.38	2.90	3423.28	622.0	7.46	.87	3424.15	.00	2.70		5.00	20.00	3.00	0	.00
0 45.48	.00776					.00792	.36			2.93			3.00		
0 17668.37	3420.73	2.93	3423.66	622.0	7.36	.84	3424.51	.00	2.70		5.00	20.00	3.00	0	.00
0 47.63	.00776					.00776	.37			2.93			3.00		
0 17716.00	3421.10	2.93	3424.03	622.0	7.36	.84	3424.88	.00	2.70		5.00	20.00	3.00	0	.00
0 5.65	.01208					.00833	.05			2.60			3.00		
0 17721.65	3421.17	2.83	3424.00	622.0	7.72	.93	3424.92	.00	2.70		5.00	20.00	3.00	0	.00
0 1.71	.01208					.00909	.02			2.60			3.00		
0 17723.36	3421.19	2.79	3423.98	622.0	7.84	.96	3424.94	.00	2.70		5.00	20.00	3.00	0	.00
OHYDRAULIC JUMP													3.00		
0 17723.36	3421.19	2.60	3423.79	622.0	8.60	1.15	3424.94	.00	2.70		5.00	20.00	3.00	0	.00
0 448.62	.01208					.01208	5.42			2.60			3.00		
0 18171.98	3426.61	2.60	3429.21	622.0	8.60	1.15	3430.36	.00	2.70		5.00	20.00	3.00	0	.00
0 16.02	.01208					.01219	.20			2.60			3.00		
0 18188.00	3426.80	2.59	3429.39	622.0	8.65	1.16	3430.55	.00	2.70		5.00	20.00	3.00	0	.00
0 219.47	.01229					.01230	2.70			2.59			3.00		
0 18407.47	3429.50	2.59	3432.09	622.0	8.65	1.16	3433.25	.00	2.70		5.00	20.00	3.00	0	.00
0 16.53	.01229					.01209	.20			2.59			3.00		
0 18424.00	3429.70	2.61	3432.31	622.0	8.55	1.14	3433.45	.00	2.70		5.00	20.00	3.00	0	.00
0 221.31	.01187					.01188	2.63			2.61			3.00		
0 18645.31	3432.33	2.61	3434.94	622.0	8.55	1.14	3436.07	.00	2.70		5.00	20.00	3.00	0	.00
0 14.69	.01187					.01209	.18			2.61			3.00		
0 18660.00	3432.50	2.59	3435.09	622.0	8.65	1.16	3436.25	.00	2.70		5.00	20.00	3.00	0	.00

WATER SURFACE PROFILE LISTING

KINGMAN MASTER DRAINAGE PLAN

LINE Af

Q100

O STATION	INVERT ELEV	DEPTH OF FLOW	W.S. ELEV	Q	VEL	VEL HEAD	ENERGY GRD.EL.	SUPER ELEV	CRITICAL DEPTH		HGT/ DIA	BASE/ ID NO.	ZL	NO PIER	AVBPR
O L/ELEM	SO					SF AVE	HF			NORM DEPTH			ZR		
0 453.35	.01229					.01230	5.58			2.59			3.00		
0 19113.35	3438.07	2.59	3440.66	622.0	8.65	1.16	3441.82	.00	2.70		5.00	20.00	3.00	0	.00
0 18.65	.01229					.01219	.23			2.59			3.00		
0 19132.00	3438.30	2.60	3440.90	622.0	8.60	1.15	3442.05	.00	2.70		5.00	20.00	3.00	0	.00
0 928.66	.01208					.01208	11.22			2.60			3.00		
0 20060.66	3449.51	2.60	3452.12	622.0	8.60	1.15	3453.27	.00	2.70		5.00	20.00	3.00	0	.00
0 15.34	.01208					.01214	.19			2.60			3.00		
0 20076.00	3449.70	2.60	3452.29	622.0	8.63	1.16	3453.45	.00	2.70		5.00	20.00	3.00	0	.00
0 922.32	.01218					.01220	11.25			2.60			3.00		
0 20998.32	3460.94	2.60	3463.53	622.0	8.63	1.16	3464.69	.00	2.70		5.00	20.00	3.00	0	.00
0 21.68	.01218					.01214	.26			2.60			3.00		
0 21020.00	3461.20	2.60	3463.80	622.0	8.60	1.15	3464.95	.00	2.70		5.00	20.00	3.00	0	.00
0 935.73	.01208					.01208	11.30			2.60			3.00		
0 21955.73	3472.50	2.60	3475.10	622.0	8.60	1.15	3476.25	.00	2.70		5.00	20.00	3.00	0	.00
0 8.27	.01208					.01133	.09			2.60			3.00		
0 21964.00	3472.60	2.70	3475.30	622.0	8.21	1.05	3476.34	.00	2.70		5.00	20.00	3.00	0	.00
0 1.87	.00665					.00991	.02			3.06			3.00		
0 21965.87	3472.61	2.80	3475.41	622.0	7.83	.95	3476.36	.00	2.70		5.00	20.00	3.00	0	.00
0 8.96	.00665					.00866	.08			3.06			3.00		
0 21974.83	3472.67	2.90	3475.57	622.0	7.46	.87	3476.44	.00	2.70		5.00	20.00	3.00	0	.00
0 32.05	.00665					.00756	.24			3.06			3.00		
0 22006.88	3472.89	3.01	3475.90	622.0	7.12	.79	3476.68	.00	2.70		5.00	20.00	3.00	0	.00
0 76.71	.00665					.00685	.53			3.06			3.00		
0 22083.58	3473.40	3.06	3476.45	622.0	6.97	.76	3477.21	.00	2.70		5.00	20.00	3.00	0	.00
0 316.42	.00665					.00666	2.11			3.06			3.00		
0 22400.00	3475.50	3.06	3478.56	622.0	6.97	.76	3479.31	.00	2.70		5.00	20.00	3.00	0	.00
0 -.00	.00665					.00333	.00			3.06			3.00		
0 22400.00	3475.50	3.06	3478.56	622.0	6.97	.76	3479.31	.00	2.70		5.00	20.00	3.00	0	.00

1

WATER SURFACE PROFILE LISTING

KINGMAN MASTER DRAINAGE PLAN

LINE Ag

Q100

O	STATION	INVERT ELEV	DEPTH OF FLOW	W.S. ELEV	Q	VEL	VEL HEAD	ENERGY GRD.EL.	SUPER ELEV	CRITICAL DEPTH		HGT/ DIA	BASE/ ID NO.	ZL	NO PIER	AVBPR
O	L/ELEM	SO					SF AVE	HF			NORM DEPTH			ZR		
0	.00	3242.00	5.00	3247.00	5319.0	9.25	1.33	3248.33	.00	4.25		8.00	100.00	3.00	0	.00
0	.21	.01526					.00489	.00			3.59			3.00		
0	.21	3242.00	4.99	3247.00	5319.0	9.26	1.33	3248.33	.00	4.25		8.00	100.00	3.00	0	.00
OHYDRAULIC JUMP														3.00		
0	.21	3242.00	3.59	3245.59	5319.0	13.39	2.79	3248.38	.00	4.25		8.00	100.00	3.00	0	.00
0	28366.17	.01526					.01526	*****			3.59			3.00		
0	28366.38	3674.91	3.59	3678.50	5319.0	13.39	2.79	3681.29	.00	4.25		8.00	100.00	3.00	0	.00
0	90.46	.01526					.01426	1.29			3.59			3.00		
0	28456.84	3676.29	3.74	3680.03	5319.0	12.80	2.54	3682.58	.00	4.25		8.00	100.00	3.00	0	.00
0	22.70	.01526					.01234	.28			3.59			3.00		
0	28479.54	3676.64	3.90	3680.54	5319.0	12.20	2.31	3682.86	.00	4.25		8.00	100.00	3.00	0	.00
0	8.37	.01526					.01065	.09			3.59			3.00		
0	28487.92	3676.77	4.07	3680.84	5319.0	11.63	2.10	3682.95	.00	4.25		8.00	100.00	3.00	0	.00
0	2.08	.01526					.00919	.02			3.59			3.00		
0	28490.00	3676.80	4.25	3681.05	5319.0	11.09	1.91	3682.96	.00	4.25		8.00	100.00	3.00	0	.00
OJUNCT STR		.01997					.05755	.29						3.00		
0	28495.00	3676.90	5.83	3682.73	4271.0	6.23	.60	3683.34	.00	3.70		8.00	100.00	3.00	0	.00
0	5.00	.02002					.00192	.01			2.91			3.00		
0	28500.00	3677.00	5.71	3682.71	4271.0	6.38	.63	3683.35	.00	3.70		8.00	100.00	3.00	0	.00
0	28500.00	3677.00	2.75	3679.75	4271.0	17.58	4.80	3684.55	.00	4.22		8.00	80.00	3.00	0	.00
0	2282.00	.03720					.03723	84.95			2.75			3.00		
0	30782.00	3761.89	2.75	3764.64	4271.0	17.58	4.80	3769.45	.00	4.22		8.00	80.00	3.00	0	.00
0	123.81	.03720					.03474	4.30			2.75			3.00		
0	30905.81	3766.50	2.87	3769.37	4271.0	16.79	4.38	3773.75	.00	4.22		8.00	80.00	3.00	0	.00
0	37.80	.03720					.03003	1.14			2.75			3.00		
0	30943.61	3767.90	3.00	3770.90	4271.0	16.00	3.98	3774.88	.00	4.22		8.00	80.00	3.00	0	.00
0	20.33	.03720					.02591	.53			2.75			3.00		
0	30963.94	3768.66	3.13	3771.79	4271.0	15.26	3.62	3775.41	.00	4.22		8.00	80.00	3.00	0	.00
0	12.89	.03720					.02236	.29			2.75			3.00		
0	30976.82	3769.14	3.27	3772.41	4271.0	14.55	3.29	3775.70	.00	4.22		8.00	80.00	3.00	0	.00
0	8.71	.03720					.01930	.17			2.75			3.00		
0	30985.53	3769.46	3.41	3772.87	4271.0	13.87	2.99	3775.86	.00	4.22		8.00	80.00	3.00	0	.00
0	5.99	.03720					.01666	.10			2.75			3.00		
0	30991.52	3769.68	3.56	3773.25	4271.0	13.23	2.72	3775.96	.00	4.22		8.00	80.00	3.00	0	.00

WATER SURFACE PROFILE LISTING

KINGMAN MASTER DRAINAGE PLAN

LINE Ag

Q100

O STATION	INVERT ELEV	DEPTH OF FLOW	W.S. ELEV	Q	VEL	VEL HEAD	ENERGY GRD.EL.	SUPER ELEV	CRITICAL DEPTH		HGT/ DIA	BASE/ ID NO.	ZL	NO PIER	AVBPR
O L/ELEM	SO					SF AVE	HF			NORM DEPTH			ZR		
0 4.05	.03720					.01439	.06			2.75			3.00		
0 30995.58	3769.84	3.72	3773.55	4271.0	12.61	2.47	3776.02	.00	4.22		8.00	80.00	3.00	0	.00
0 2.58	.03720					.01244	.03			2.75			3.00		
0 30998.16	3769.93	3.88	3773.81	4271.0	12.02	2.25	3776.06	.00	4.22		8.00	80.00	3.00	0	.00
0 1.41	.03720					.01075	.02			2.75			3.00		
0 30999.56	3769.98	4.04	3774.03	4271.0	11.46	2.04	3776.07	.00	4.22		8.00	80.00	3.00	0	.00
0 .44	.03720					.00930	.00			2.75			3.00		
0 31000.00	3770.00	4.22	3774.22	4271.0	10.93	1.86	3776.07	.00	4.22		8.00	80.00	3.00	0	.00
OJUNCT STR	.00386					.00445	9.35						3.00		
0 33100.00	3778.10	7.21	3785.31	1983.0	2.71	.11	3785.42	.16	2.59		8.00	80.00	3.00	0	.00
0 100.00	.00400					.00322	.32			6.75			3.00		
0 33200.00	3778.50	7.13	3785.63	1983.0	2.74	.12	3785.75	.00	2.59		8.00	80.00	3.00	0	.00
0 63.60	.00447					.00032	.02			3.27			3.00		
0 33263.60	3778.78	6.85	3785.64	1983.0	2.88	.13	3785.77	.00	2.59		8.00	80.00	3.00	0	.00
0 61.80	.00447					.00037	.02			3.27			3.00		
0 33325.39	3779.06	6.59	3785.65	1983.0	3.02	.14	3785.79	.00	2.59		8.00	80.00	3.00	0	.00
0 60.09	.00447					.00042	.03			3.27			3.00		
0 33385.48	3779.33	6.33	3785.66	1983.0	3.17	.16	3785.81	.00	2.59		8.00	80.00	3.00	0	.00
0 58.49	.00447					.00049	.03			3.27			3.00		
0 33443.97	3779.59	6.08	3785.67	1983.0	3.32	.17	3785.84	.00	2.59		8.00	80.00	3.00	0	.00
0 57.00	.00447					.00056	.03			3.27			3.00		
0 33500.98	3779.85	5.84	3785.69	1983.0	3.48	.19	3785.87	.00	2.59		8.00	80.00	3.00	0	.00
0 55.64	.00447					.00064	.04			3.27			3.00		
0 33556.62	3780.09	5.61	3785.70	1983.0	3.65	.21	3785.91	.00	2.59		8.00	80.00	3.00	0	.00
0 54.43	.00447					.00074	.04			3.27			3.00		
0 33611.05	3780.34	5.38	3785.72	1983.0	3.83	.23	3785.95	.00	2.59		8.00	80.00	3.00	0	.00
0 53.39	.00447					.00086	.05			3.27			3.00		
0 33664.45	3780.58	5.17	3785.75	1983.0	4.02	.25	3786.00	.00	2.59		8.00	80.00	3.00	0	.00
0 52.55	.00447					.00099	.05			3.27			3.00		
0 33717.00	3780.81	4.96	3785.77	1983.0	4.21	.28	3786.05	.00	2.59		8.00	80.00	3.00	0	.00
0 51.96	.00447					.00114	.06			3.27			3.00		
0 33768.96	3781.04	4.76	3785.80	1983.0	4.42	.30	3786.11	.00	2.59		8.00	80.00	3.00	0	.00
0 51.70	.00447					.00132	.07			3.27			3.00		
0 33820.66	3781.28	4.57	3785.84	1983.0	4.63	.33	3786.18	.00	2.59		8.00	80.00	3.00	0	.00

WATER SURFACE PROFILE LISTING

KINGMAN MASTER DRAINAGE PLAN

LINE Ag

Q100

O	STATION	INVERT ELEV	DEPTH OF FLOW	W.S. ELEV	Q	VEL	VEL HEAD	ENERGY GRD.EL.	SUPER ELEV	CRITICAL DEPTH		HGT/ DIA	BASE/ ID NO.	ZL	NO PIER	AVBPR
O	L/ELEM	SO					SF AVE	HF			NORM DEPTH			ZR		
0	51.87	.00447					.00152	.08			3.27			3.00		
0	33872.53	3781.51	4.38	3785.89	1983.0	4.86	.37	3786.25	.00	2.59		8.00	80.00	3.00	0	.00
0	52.64	.00447					.00176	.09			3.27			3.00		
0	33925.17	3781.74	4.20	3785.94	1983.0	5.10	.40	3786.35	.00	2.59		8.00	80.00	3.00	0	.00
0	54.34	.00447					.00203	.11			3.27			3.00		
0	33979.50	3781.99	4.03	3786.01	1983.0	5.35	.44	3786.46	.00	2.59		8.00	80.00	3.00	0	.00
0	57.54	.00447					.00235	.14			3.27			3.00		
0	34037.05	3782.24	3.86	3786.10	1983.0	5.61	.49	3786.59	.00	2.59		8.00	80.00	3.00	0	.00
0	63.55	.00447					.00272	.17			3.27			3.00		
0	34100.60	3782.53	3.70	3786.23	1983.0	5.88	.54	3786.77	.00	2.59		8.00	80.00	3.00	0	.00
0	75.80	.00447					.00315	.24			3.27			3.00		
0	34176.40	3782.87	3.55	3786.41	1983.0	6.17	.59	3787.00	.00	2.59		8.00	80.00	3.00	0	.00
0	107.61	.00447					.00364	.39			3.27			3.00		
0	34284.02	3783.35	3.40	3786.75	1983.0	6.47	.65	3787.40	.00	2.59		8.00	80.00	3.00	0	.00
0	255.53	.00447					.00419	1.07			3.27			3.00		
0	34539.54	3784.49	3.27	3787.76	1983.0	6.76	.71	3788.47	.00	2.59		8.00	80.00	3.00	0	.00
0	360.46	.00447					.00447	1.61			3.27			3.00		
0	34900.00	3786.10	3.27	3789.37	1983.0	6.76	.71	3790.08	.00	2.59		8.00	80.00	3.00	0	.00
1																

WATER SURFACE PROFILE LISTING

KINGMAN MASTER DRAINAGE PLAN

LINE Ah

Q100

O STATION / O L/ELEM	INVERT ELEV / SO	DEPTH OF FLOW	W.S. ELEV	Q	VEL	VEL HEAD / SF AVE	ENERGY GRD.EL. / HF	SUPER ELEV	CRITICAL DEPTH / NORM DEPTH	HGT/ DIA	BASE/ ID NO.	ZL / ZR	NO PIER	AVBPR
0 .00	3242.00	3.00	3245.00	1270.0	7.18	.80	3245.80	.00	2.57	5.00	50.00	3.00	0	.00
0 95.91	.00667					.00632	.61		2.91			3.00		
0 95.91	3242.64	2.91	3245.55	1270.0	7.44	.86	3246.41	.00	2.57	5.00	50.00	3.00	0	.00
0 4997.29	3277.78	2.48	3280.26	1270.0	8.92	1.24	3281.50	.00	2.57	5.00	50.00	3.00	0	.00
0 1.71	.00891					.01178	.02		2.67			3.00		
0 4999.00	3277.80	2.45	3280.25	1270.0	9.03	1.27	3281.52	.00	2.57	5.00	50.00	3.00	0	.00
0 317.00	.01199					.01200	3.80		2.45			3.00		
0 5316.00	3281.60	2.45	3284.05	1270.0	9.03	1.27	3285.32	.00	2.57	5.00	50.00	3.00	0	.00
0 296.88	.01199					.01200	3.56		2.45			3.00		
0 5612.88	3285.16	2.45	3287.61	1270.0	9.03	1.27	3288.88	.00	2.57	5.00	50.00	3.00	0	.00
0 20.12	.01199					.01184	.24		2.45			3.00		
0 5633.00	3285.40	2.47	3287.87	1270.0	8.95	1.25	3289.12	.00	2.57	5.00	50.00	3.00	0	.00
0 300.00	.01167					.01169	3.51		2.47			3.00		
0 5933.00	3288.90	2.47	3291.37	1270.0	8.95	1.25	3292.62	.00	2.57	5.00	50.00	3.00	0	.00
0 2904.09	.00667					.00667	19.37		2.91			3.00		
0 3000.00	3262.00	2.91	3264.91	1270.0	7.44	.86	3265.77	.00	2.57	5.00	50.00	3.00	0	.00
0 95.08	.00597					.00632	.60		3.00			3.00		
0 3095.08	3262.57	3.00	3265.57	1270.0	7.18	.80	3266.37	.00	2.57	5.00	50.00	3.00	0	.00
0 557.92	.00597					.00597	3.33		3.00			3.00		
0 3653.00	3265.90	3.00	3268.90	1270.0	7.18	.80	3269.70	.00	2.57	5.00	50.00	3.00	0	.00
0 17.91	.00877					.00643	.12		2.68			3.00		
0 3670.91	3266.06	2.88	3268.94	1270.0	7.53	.88	3269.82	.00	2.57	5.00	50.00	3.00	0	.00
0 21.98	.00877					.00743	.16		2.68			3.00		
0 3692.89	3266.25	2.76	3269.01	1270.0	7.89	.97	3269.98	.00	2.57	5.00	50.00	3.00	0	.00
0 31.01	.00877					.00837	.26		2.68			3.00		
0 3723.89	3266.52	2.68	3269.21	1270.0	8.15	1.03	3270.24	.00	2.57	5.00	50.00	3.00	0	.00
0 602.11	.00877					.00877	5.28		2.68			3.00		
0 4326.00	3271.80	2.68	3274.49	1270.0	8.15	1.03	3275.52	.00	2.57	5.00	50.00	3.00	0	.00
0 22.41	.00891					.00885	.20		2.67			3.00		
0 4348.41	3272.00	2.67	3274.67	1270.0	8.19	1.04	3275.72	.00	2.57	5.00	50.00	3.00	0	.00
0 648.88	.00891					.00892	5.79		2.67			3.00		
0 4997.29	3277.78	2.67	3280.46	1270.0	8.19	1.04	3281.50	.00	2.57	5.00	50.00	3.00	0	.00
OHYDRAULIC JUMP												3.00		
0 17.00	.01167					.01184	.20		2.47			3.00		

WATER SURFACE PROFILE LISTING

KINGMAN MASTER DRAINAGE PLAN

LINE Ah

Q100

0 STATION / 0 L/ELEM	INVERT ELEV / SO	DEPTH OF FLOW	W.S. ELEV	Q	VEL	VEL HEAD / SF AVE	ENERGY GRD.EL. / HF	SUPER ELEV	CRITICAL DEPTH / NORM DEPTH	HGT/ DIA	BASE/ ID NO.	ZL / ZR	NO PIER	AVBPR
0 5950.00	3289.10	2.45	3291.55	1270.0	9.03	1.27	3292.82	.00	2.57	5.00	50.00	3.00	0	.00
0 317.00	.01199					.01200	3.80		2.45			3.00		
0 6267.00	3292.90	2.45	3295.35	1270.0	9.03	1.27	3296.62	.00	2.57	5.00	50.00	3.00	0	.00
0 317.00	.01199					.01200	3.80		2.45			3.00		
0 6584.00	3296.70	2.45	3299.15	1270.0	9.03	1.27	3300.42	.00	2.57	5.00	50.00	3.00	0	.00
0 297.04	.01199					.01200	3.56		2.45			3.00		
0 6881.04	3300.26	2.45	3302.71	1270.0	9.03	1.27	3303.98	.00	2.57	5.00	50.00	3.00	0	.00
0 19.96	.01199					.01219	.24		2.45			3.00		
0 6901.00	3300.50	2.43	3302.93	1270.0	9.12	1.29	3304.22	.00	2.57	5.00	50.00	3.00	0	.00
0 .00	.01199					.01238	.00		2.45			3.00		
0 6901.00	3300.50	2.43	3302.93	1270.0	9.12	1.29	3304.22	.00	2.57	5.00	50.00	3.00	0	.00
0 273.09	.01237					.01238	3.38		2.43			3.00		
0 7174.09	3303.88	2.43	3306.31	1270.0	9.12	1.29	3307.60	.00	2.57	5.00	50.00	3.00	0	.00
0 20.59	.01237					.01207	.25		2.43			3.00		
0 7194.68	3304.13	2.47	3306.60	1270.0	8.97	1.25	3307.85	.00	2.57	5.00	50.00	3.00	0	.00
0 5.32	.01237					.01095	.06		2.43			3.00		
0 7200.00	3304.20	2.57	3306.77	1270.0	8.55	1.14	3307.91	.00	2.57	5.00	50.00	3.00	0	.00
1														

WATER SURFACE PROFILE LISTING

KINGMAN MASTER DRAINAGE PLAN

LINE Ai

Q100

0 STATION	INVERT ELEV	DEPTH OF FLOW	W.S. ELEV	Q	VEL	VEL HEAD	ENERGY GRD.EL.	SUPER ELEV	CRITICAL DEPTH		HGT/ DIA	BASE/ ID NO.	ZL	NO PIER	AVBPR
0 L/ELEM	SO					SF AVE	HF			NORM DEPTH			ZR		
0 .00	3258.00	4.00	3262.00	676.0	5.28	.43	3262.43	.00	2.83		5.00	20.00	3.00	0	.00
0 61.27	.00457					.00305	.19			3.53			3.00		
0 61.27	3258.28	3.86	3262.14	676.0	5.54	.48	3262.62	.00	2.83		5.00	20.00	3.00	0	.00
0 78.18	.00457					.00348	.27			3.53			3.00		
0 139.46	3258.64	3.73	3262.37	676.0	5.81	.52	3262.89	.00	2.83		5.00	20.00	3.00	0	.00
0 129.55	.00457					.00398	.52			3.53			3.00		
0 269.00	3259.23	3.60	3262.83	676.0	6.09	.58	3263.41	.00	2.83		5.00	20.00	3.00	0	.00
0 236.92	.00457					.00441	1.04			3.53			3.00		
0 505.93	3260.31	3.53	3263.84	676.0	6.26	.61	3264.45	.00	2.83		5.00	20.00	3.00	0	.00
0 2994.07	.00457					.00457	13.69			3.53			3.00		
0 3500.00	3274.00	3.53	3277.53	676.0	6.26	.61	3278.14	.00	2.83		5.00	20.00	3.00	0	.00
0 54.44	.00605					.00490	.27			3.28			3.00		
0 3554.44	3274.33	3.41	3277.74	676.0	6.56	.67	3278.41	.00	2.83		5.00	20.00	3.00	0	.00
0 119.27	.00605					.00560	.67			3.28			3.00		
0 3673.71	3275.05	3.29	3278.34	676.0	6.88	.74	3279.08	.00	2.83		5.00	20.00	3.00	0	.00
0 130.53	.00605					.00601	.79			3.28			3.00		
0 3804.24	3275.84	3.28	3279.12	676.0	6.91	.74	3279.86	.00	2.83		5.00	20.00	3.00	0	.00
0 555.76	.00605					.00605	3.36			3.28			3.00		
0 4360.00	3279.20	3.28	3282.48	676.0	6.91	.74	3283.22	.00	2.83		5.00	20.00	3.00	0	.00
0 26.28	.00807					.00649	.17			3.04			3.00		
0 4386.28	3279.41	3.16	3282.58	676.0	7.25	.82	3283.39	.00	2.83		5.00	20.00	3.00	0	.00
0 47.60	.00807					.00742	.35			3.04			3.00		
0 4433.88	3279.80	3.05	3282.85	676.0	7.60	.90	3283.74	.00	2.83		5.00	20.00	3.00	0	.00
0 44.68	.00807					.00799	.36			3.04			3.00		
0 4478.56	3280.16	3.04	3283.19	676.0	7.65	.91	3284.10	.00	2.83		5.00	20.00	3.00	0	.00
0 761.44	.00807					.00807	6.14			3.04			3.00		
0 5240.00	3286.30	3.04	3289.34	676.0	7.65	.91	3290.25	.00	2.83		5.00	20.00	3.00	0	.00
0 45.72	.00818					.00813	.37			3.02			3.00		
0 5285.72	3286.67	3.02	3289.70	676.0	7.69	.92	3290.62	.00	2.83		5.00	20.00	3.00	0	.00
0 834.28	.00818					.00819	6.83			3.02			3.00		
0 6120.00	3293.50	3.02	3296.52	676.0	7.69	.92	3297.44	.00	2.83		5.00	20.00	3.00	0	.00
0 42.01	.00807					.00813	.34			3.04			3.00		
0 6162.01	3293.84	3.04	3296.87	676.0	7.65	.91	3297.78	.00	2.83		5.00	20.00	3.00	0	.00
0 834.67	.00807					.00807	6.73			3.04			3.00		

WATER SURFACE PROFILE LISTING

KINGMAN MASTER DRAINAGE PLAN

LINE Ai

Q100

O	STATION	INVERT ELEV	DEPTH OF FLOW	W.S. ELEV	Q	VEL	VEL HEAD	ENERGY GRD.EL.	SUPER ELEV	CRITICAL DEPTH		HGT/ DIA	BASE/ ID NO.	ZL	NO PIER	AVBPR
O	L/ELEM	SO					SF AVE	HF			NORM DEPTH			ZR		
0	6996.68	3300.57	3.04	3303.61	676.0	7.65	.91	3304.52	.00	2.83		5.00	20.00	3.00	0	.00
O	HYDRAULIC JUMP													3.00		
0	6996.68	3300.57	2.64	3303.21	676.0	9.19	1.31	3304.52	.00	2.83		5.00	20.00	3.00	0	.00
0	3.32	.00807					.01419	.05			3.04			3.00		
0	7000.00	3300.60	2.58	3303.18	676.0	9.46	1.39	3304.57	.00	2.83		5.00	20.00	3.00	0	.00
0	132.25	.01476					.01478	1.95			2.58			3.00		
0	7132.25	3302.55	2.58	3305.13	676.0	9.46	1.39	3306.52	.00	2.83		5.00	20.00	3.00	0	.00
0	36.45	.01476					.01518	.55			2.58			3.00		
0	7168.70	3303.09	2.54	3305.63	676.0	9.64	1.44	3307.07	.00	2.83		5.00	20.00	3.00	0	.00
0	25.87	.01476					.01673	.43			2.58			3.00		
0	7194.57	3303.47	2.45	3305.92	676.0	10.11	1.59	3307.51	.00	2.83		5.00	20.00	3.00	0	.00
0	15.43	.01476					.01919	.30			2.58			3.00		
0	7210.00	3303.70	2.36	3306.06	676.0	10.60	1.75	3307.80	.00	2.83		5.00	20.00	3.00	0	.00
0	.00	.01476					.02050	.00			2.58			3.00		
0	7210.00	3303.70	2.36	3306.06	676.0	10.60	1.75	3307.80	.00	2.83		5.00	20.00	3.00	0	.00
0	132.46	.02048					.02050	2.72			2.36			3.00		
0	7342.46	3306.41	2.36	3308.77	676.0	10.60	1.75	3310.51	.00	2.83		5.00	20.00	3.00	0	.00
0	53.28	.02048					.01927	1.03			2.36			3.00		
0	7395.74	3307.50	2.44	3309.94	676.0	10.14	1.60	3311.54	.00	2.83		5.00	20.00	3.00	0	.00
0	14.53	.02048					.01689	.25			2.36			3.00		
0	7410.27	3307.80	2.53	3310.33	676.0	9.67	1.45	3311.79	.00	2.83		5.00	20.00	3.00	0	.00
0	6.25	.02048					.01473	.09			2.36			3.00		
0	7416.53	3307.93	2.63	3310.56	676.0	9.22	1.32	3311.88	.00	2.83		5.00	20.00	3.00	0	.00
0	2.74	.02048					.01285	.04			2.36			3.00		
0	7419.26	3307.98	2.73	3310.71	676.0	8.79	1.20	3311.91	.00	2.83		5.00	20.00	3.00	0	.00
0	.74	.02048					.01121	.01			2.36			3.00		
0	7420.00	3308.00	2.83	3310.83	676.0	8.38	1.09	3311.92	.00	2.83		5.00	20.00	3.00	0	.00

WATER SURFACE PROFILE LISTING

KINGMAN MASTER DRAINAGE PLAN
LINE Aj
Q100

O	STATION	INVERT ELEV	DEPTH OF FLOW	W.S. ELEV	Q	VEL	VEL HEAD	ENERGY GRD.EL.	SUPER ELEV	CRITICAL DEPTH		HGT/ DIA	BASE/ ID NO.	ZL	NO PIER	AVBPR
O	L/ELEM	SO					SF AVE	HF			NORM DEPTH			ZR		
0	.00	3260.00	4.00	3264.00	422.0	3.30	.17	3264.17	.00	2.14		6.00	20.00	3.00	0	.00
0	17.66	.00797					.00119	.02			2.36			3.00		
0	17.66	3260.14	3.86	3264.00	422.0	3.46	.19	3264.19	.00	2.14		6.00	20.00	3.00	0	.00
0	17.27	.00797					.00136	.02			2.36			3.00		
0	34.93	3260.28	3.73	3264.01	422.0	3.63	.20	3264.21	.00	2.14		6.00	20.00	3.00	0	.00
0	16.91	.00797					.00155	.03								
0	15.93	.00797					.00348	.06			2.36			3.00		
0	148.50	3261.18	2.90	3264.09	422.0	5.06	.40	3264.49	.00	2.14		6.00	20.00	3.00	0	.00
0	16.23	.00797					.00398	.06			2.36			3.00		
0	164.72	3261.31	2.80	3264.11	422.0	5.31	.44	3264.55	.00	2.14		6.00	20.00	3.00	0	.00
0	16.88	.00797					.00456	.08			2.36			3.00		
0	181.61	3261.45	2.70	3264.15	422.0	5.57	.48	3264.63	.00	2.14		6.00	20.00	3.00	0	.00
0	18.25	.00797					.00523	.10			2.36			3.00		
0	199.85	3261.59	2.60	3264.19	422.0	5.84	.53	3264.72	.00	2.14		6.00	20.00	3.00	0	.00
0	21.33	.00797					.00599	.13			2.36			3.00		
0	221.18	3261.76	2.50	3264.27	422.0	6.13	.58	3264.85	.00	2.14		6.00	20.00	3.00	0	.00
0	30.83	.00797					.00687	.21			2.36			3.00		
0	252.01	3262.01	2.41	3264.42	422.0	6.42	.64	3265.06	.00	2.14		6.00	20.00	3.00	0	.00
0	52.51	.00797					.00766	.40			2.36			3.00		
0	304.53	3262.43	2.36	3264.78	422.0	6.61	.68	3265.46	.00	2.14		6.00	20.00	3.00	0	.00
0	84.47	.00797					.00797	.67			2.36			3.00		
0	389.00	3263.10	2.36	3265.46	422.0	6.61	.68	3266.14	.00	2.14		6.00	20.00	3.00	0	.00
0	4.97	.01252					.00856	.04			2.08			3.00		
0	393.97	3263.16	2.27	3265.43	422.0	6.94	.75	3266.18	.00	2.14		6.00	20.00	3.00	0	.00
0	3.06	.01252					.00968	.03			2.08			3.00		
0	397.04	3263.20	2.20	3265.40	422.0	7.20	.81	3266.21	.00	2.14		6.00	20.00	3.00	0	.00
OHYDRAULIC JUMP														3.00		
0	397.04	3263.20	2.08	3265.28	422.0	7.73	.93	3266.21	.00	2.14		6.00	20.00	3.00	0	.00
0	9751.12	.01252					.01254	*****			2.08			3.00		
0	10148.15	3385.26	2.08	3387.34	422.0	7.73	.93	3388.27	.00	2.14		6.00	20.00	3.00	0	.00
0	10.85	.01252					.01281	.14			2.08			3.00		
0	10159.00	3385.40	2.06	3387.46	422.0	7.85	.96	3388.41	.00	2.14		6.00	20.00	3.00	0	.00
0	2140.56	.01309					.01309	28.03			2.06			3.00		
0	12299.56	3413.41	2.06	3415.46	422.0	7.85	.96	3416.42	.00	2.14		6.00	20.00	3.00	0	.00

WATER SURFACE PROFILE LISTING

KINGMAN MASTER DRAINAGE PLAN

LINE Aj

Q100

0 STATION / 0 L/ELEM	INVERT ELEV / SO	DEPTH OF FLOW	W.S. ELEV	Q	VEL	VEL HEAD / SF AVE	ENERGY GRD.EL. / HF	SUPER ELEV	CRITICAL DEPTH / NORM DEPTH	HGT/ DIA	BASE/ ID NO.	ZL / ZR	NO PIER	AVBPR
0 37.44	.01309					.01308	.49		2.06			3.00		
0 12337.00	3413.90	2.06	3415.96	422.0	7.84	.96	3416.91	.00	2.14	6.00	20.00	3.00	0	.00
0 1808.45	.01306					.01307	23.64		2.06			3.00		
0 14145.45	3437.51	2.06	3439.57	422.0	7.84	.96	3440.53	.00	2.14	6.00	20.00	3.00	0	.00
0 6.55	.01306					.01308	.09		2.06			3.00		
0 14152.00	3437.60	2.06	3439.66	422.0	7.85	.96	3440.61	.00	2.14	6.00	20.00	3.00	0	.00
0 2140.56	.01309					.01309	28.03		2.06			3.00		
0 16292.56	3465.61	2.06	3467.67	422.0	7.85	.96	3468.62	.00	2.14	6.00	20.00	3.00	0	.00
0 37.44	.01309					.01308	.49		2.06			3.00		
0 16330.00	3466.10	2.06	3468.16	422.0	7.84	.96	3469.11	.00	2.14	6.00	20.00	3.00	0	.00
0 1815.00	.01306					.01307	23.72		2.06			3.00		
0 18145.00	3489.80	2.06	3491.86	422.0	7.84	.96	3492.81	.00	2.14	6.00	20.00	3.00	0	.00
0 -.00	.01306					.01307	.00		2.06			3.00		
0 18145.00	3489.80	2.06	3491.86	422.0	7.84	.96	3492.81	.00	2.14	6.00	20.00	3.00	0	.00
0 1434.17	.01306					.01307	18.74		2.06			3.00		
0 19579.16	3508.53	2.06	3510.58	422.0	7.84	.96	3511.54	.00	2.14	6.00	20.00	3.00	0	.00
0 15.16	.01306					.01300	.20		2.06			3.00		
0 19594.32	3508.73	2.06	3510.79	422.0	7.81	.95	3511.74	.00	2.14	6.00	20.00	3.00	0	.00
0 5.68	.01306					.01208	.07		2.06			3.00		
0 19600.00	3508.80	2.14	3510.94	422.0	7.45	.86	3511.81	.00	2.14	6.00	20.00	3.00	0	.00

WATER SURFACE PROFILE LISTING

KINGMAN MASTER DRAINAGE PLAN

LINE Ak

Q100

0 STATION	INVERT ELEV	DEPTH OF FLOW	W.S. ELEV	Q	VEL	VEL HEAD	ENERGY GRD.EL.	SUPER ELEV	CRITICAL DEPTH		HGT/ DIA	BASE/ ID NO.	ZL	NO PIER	AVBPR
0 L/ELEM	SO					SF AVE	HF			NORM DEPTH			ZR		
0 .00	3292.00	3.00	3295.00	697.0	8.01	1.00	3296.00	.00	2.88		6.00	20.00	3.00	0	.00
0 24.28	.00889					.00893	.22			3.01			3.00		
0 24.28	3292.22	3.01	3295.22	697.0	7.99	.99	3296.21	.00	2.88		6.00	20.00	3.00	0	.00
0 7175.72	.00889					.00889	63.77			3.01			3.00		
0 7200.00	3356.00	3.01	3359.01	697.0	7.99	.99	3360.00	.00	2.88		6.00	20.00	3.00	0	.00
1															

WATER SURFACE PROFILE LISTING

KINGMAN MASTER DRAINAGE PLAN

LINE Am

Q100

O	STATION	INVERT ELEV	DEPTH OF FLOW	W.S. ELEV	Q	VEL	VEL HEAD	ENERGY GRD.EL.	SUPER ELEV	CRITICAL DEPTH		HGT/ DIA	BASE/ ID NO.	ZL	NO PIER	AVBPR
O	L/ELEM	SO					SF AVE	HF			NORM DEPTH			ZR		
0	.00	3310.50	2.64	3313.14	601.0	8.14	1.03	3314.17	.00	2.64		5.00	20.00	3.00	0	.00
0	.83	.00260					.00996	.01			3.85			3.00		
0	.83	3310.50	2.74	3313.25	601.0	7.76	.94	3314.18	.00	2.64		5.00	20.00	3.00	0	.00
0	2.91	.00260					.00869	.03			3.85			3.00		
0	3.74	3310.51	2.85	3313.36	601.0	7.40	.85	3314.21	.00	2.64		5.00	20.00	3.00	0	.00
0	5.75	.00260					.00759	.04			3.85			3.00		
0	9.50	3310.52	2.95	3313.48	601.0	7.05	.77	3314.25	.00	2.64		5.00	20.00	3.00	0	.00
0	9.69	.00260					.00663	.06			3.85			3.00		
0	19.19	3310.55	3.06	3313.61	601.0	6.73	.70	3314.31	.00	2.64		5.00	20.00	3.00	0	.00
0	15.29	.00260					.00579	.09			3.85			3.00		
0	34.48	3310.59	3.17	3313.76	601.0	6.41	.64	3314.40	.00	2.64		5.00	20.00	3.00	0	.00
0	23.59	.00260					.00506	.12			3.85			3.00		
0	58.07	3310.65	3.29	3313.94	601.0	6.11	.58	3314.52	.00	2.64		5.00	20.00	3.00	0	.00
0	36.66	.00260					.00442	.16			3.85			3.00		
0	94.73	3310.75	3.41	3314.16	601.0	5.83	.53	3314.68	.00	2.64		5.00	20.00	3.00	0	.00
0	59.37	.00260					.00387	.23			3.85			3.00		
0	154.10	3310.90	3.53	3314.43	601.0	5.56	.48	3314.91	.00	2.64		5.00	20.00	3.00	0	.00
0	106.46	.00260					.00338	.36			3.85			3.00		
0	260.56	3311.18	3.66	3314.84	601.0	5.30	.44	3315.27	.00	2.64		5.00	20.00	3.00	0	.00
0	239.44	.00260					.00297	.71			3.85			3.00		
0	500.00	3311.80	3.79	3315.59	601.0	5.06	.40	3315.98	.00	2.64		5.00	20.00	3.00	0	.00
0	34.86	.00558					.00297	.10			3.15			3.00		
0	534.86	3311.99	3.66	3315.65	601.0	5.31	.44	3316.09	.00	2.64		5.00	20.00	3.00	0	.00
0	38.11	.00558					.00340	.13			3.15			3.00		
0	572.96	3312.21	3.53	3315.74	601.0	5.57	.48	3316.22	.00	2.64		5.00	20.00	3.00	0	.00
0	44.32	.00558					.00389	.17			3.15			3.00		
0	617.29	3312.45	3.41	3315.86	601.0	5.84	.53	3316.39	.00	2.64		5.00	20.00	3.00	0	.00
0	58.74	.00558					.00444	.26			3.15			3.00		
0	676.03	3312.78	3.29	3316.07	601.0	6.12	.58	3316.65	.00	2.64		5.00	20.00	3.00	0	.00
0	117.15	.00558					.00508	.60			3.15			3.00		
0	793.17	3313.43	3.17	3316.61	601.0	6.42	.64	3317.25	.00	2.64		5.00	20.00	3.00	0	.00
0	143.14	.00558					.00550	.79			3.15			3.00		
0	936.31	3314.23	3.15	3317.38	601.0	6.49	.65	3318.03	.00	2.64		5.00	20.00	3.00	0	.00
0	1715.69	.00558					.00558	9.57			3.15			3.00		

WATER SURFACE PROFILE LISTING

KINGMAN MASTER DRAINAGE PLAN

LINE Am

Q100

O	STATION	INVERT ELEV	DEPTH OF FLOW	W.S. ELEV	Q	VEL	VEL HEAD	ENERGY GRD.EL.	SUPER ELEV	CRITICAL DEPTH		HGT/ DIA	BASE/ ID NO.	ZL	NO PIER	AVBPR
O	L/ELEM	SO					SF AVE	HF			NORM DEPTH			ZR		
0	2652.00	3323.80	3.15	3326.95	601.0	6.49	.65	3327.60	.00	2.64		5.00	20.00	3.00	0	.00
0	20.44	.00825					.00598	.12			2.83			3.00		
0	2672.44	3323.97	3.04	3327.00	601.0	6.80	.72	3327.72	.00	2.64		5.00	20.00	3.00	0	.00
0	25.99	.00825					.00685	.18			2.83			3.00		
0	2698.43	3324.18	2.93	3327.11	601.0	7.14	.79	3327.90	.00	2.64		5.00	20.00	3.00	0	.00
0	50.62	.00825					.00778	.39			2.83			3.00		
0	2749.05	3324.60	2.83	3327.43	601.0	7.45	.86	3328.30	.00	2.64		5.00	20.00	3.00	0	.00
0	1574.95	.00825					.00825	13.00			2.83			3.00		
0	4324.00	3337.60	2.83	3340.43	601.0	7.45	.86	3341.29	.00	2.64		5.00	20.00	3.00	0	.00
0	836.00	.00825					.00826	6.90			2.83			3.00		
0	5160.00	3344.50	2.83	3347.33	601.0	7.45	.86	3348.19	.00	2.64		5.00	20.00	3.00	0	.00
0	835.83	.00825					.00826	6.90			2.83			3.00		
0	5995.83	3351.40	2.83	3354.23	601.0	7.45	.86	3355.09	.00	2.64		5.00	20.00	3.00	0	.00
OHYDRAULIC JUMP														3.00		
0	5995.83	3351.40	2.46	3353.86	601.0	8.92	1.24	3355.10	.00	2.64		5.00	20.00	3.00	0	.00
0	.17	.00825					.01384	.00			2.83			3.00		
0	5996.00	3351.40	2.46	3353.86	601.0	8.92	1.24	3355.10	.00	2.64		5.00	20.00	3.00	0	.00
0	1161.20	.01383					.01385	16.08			2.46			3.00		
0	7157.20	3367.46	2.46	3369.92	601.0	8.92	1.24	3371.16	.00	2.64		5.00	20.00	3.00	0	.00
0	38.80	.01383					.01380	.54			2.46			3.00		
0	7196.00	3368.00	2.46	3370.46	601.0	8.90	1.23	3371.70	.00	2.64		5.00	20.00	3.00	0	.00
0	213.62	.01375					.01376	2.94			2.46			3.00		
0	7409.62	3370.94	2.46	3373.40	601.0	8.90	1.23	3374.63	.00	2.64		5.00	20.00	3.00	0	.00
0	26.38	.01375					.01400	.37			2.46			3.00		
0	7436.00	3371.30	2.44	3373.74	601.0	9.01	1.26	3375.00	.00	2.64		5.00	20.00	3.00	0	.00
0	410.49	.01422					.01424	5.85			2.44			3.00		
0	7846.49	3377.14	2.44	3379.58	601.0	9.01	1.26	3380.84	.00	2.64		5.00	20.00	3.00	0	.00
0	33.65	.01422					.01412	.48			2.44			3.00		
0	7880.14	3377.62	2.45	3380.07	601.0	8.96	1.25	3381.32	.00	2.64		5.00	20.00	3.00	0	.00
0	17.56	.01422					.01310	.23			2.44			3.00		
0	7897.70	3377.87	2.55	3380.41	601.0	8.54	1.13	3381.55	.00	2.64		5.00	20.00	3.00	0	.00
0	2.30	.01422					.01142	.03			2.44			3.00		
0	7900.00	3377.90	2.64	3380.54	601.0	8.14	1.03	3381.57	.00	2.64		5.00	20.00	3.00	0	.00

1

WATER SURFACE PROFILE LISTING

KINGMAN MASTER DRAINAGE PLAN

LINE An

Q100

O	STATION	INVERT ELEV	DEPTH OF FLOW	W.S. ELEV	Q	VEL	VEL HEAD	ENERGY GRD.EL.	SUPER ELEV	CRITICAL DEPTH		HGT/ DIA	BASE/ ID NO.	ZL	NO PIER	AVBPR
O	L/ELEM	SO					SF AVE	HF			NORM DEPTH			ZR		
0	.00	3316.70	4.60	3321.30	2853.0	8.40	1.10	3322.40	.00	3.86		7.00	60.00	3.00	0	.00
0	141.76	.00571					.00520	.74			4.39			3.00		
0	141.76	3317.51	4.42	3321.93	2853.0	8.81	1.21	3323.14	.00	3.86		7.00	60.00	3.00	0	.00
0	163.12	.00571					.00564	.92			4.39			3.00		
0	304.87	3318.44	4.39	3322.83	2853.0	8.89	1.23	3324.06	.00	3.86		7.00	60.00	3.00	0	.00
0	4809.13	.00571					.00571	27.48			4.39			3.00		
0	5114.00	3345.90	4.39	3350.29	2853.0	8.89	1.23	3351.51	.00	3.86		7.00	60.00	3.00	0	.00
0	9.45	.01158					.00615	.06			3.58			3.00		
0	5123.45	3346.01	4.21	3350.22	2853.0	9.32	1.35	3351.57	.00	3.86		7.00	60.00	3.00	0	.00
0	3.55	.01158					.00679	.02			3.58			3.00		
0	5127.00	3346.05	4.14	3350.19	2853.0	9.51	1.41	3351.60	.00	3.86		7.00	60.00	3.00	0	.00
O	HYDRAULIC JUMP													3.00		
0	5127.00	3346.05	3.58	3349.63	2853.0	11.25	1.97	3351.60	.00	3.86		7.00	60.00	3.00	0	.00
0	938.68	.01158					.01159	10.88			3.58			3.00		
0	6065.69	3356.92	3.58	3360.50	2853.0	11.25	1.97	3362.47	.00	3.86		7.00	60.00	3.00	0	.00
0	50.31	.01158					.01196	.60			3.58			3.00		
0	6116.00	3357.50	3.52	3361.02	2853.0	11.49	2.05	3363.07	.00	3.86		7.00	60.00	3.00	0	.00
0	2266.34	.01232					.01232	27.93			3.52			3.00		
0	8382.34	3385.42	3.52	3388.94	2853.0	11.49	2.05	3390.99	.00	3.86		7.00	60.00	3.00	0	.00
0	55.27	.01232					.01214	.67			3.52			3.00		
0	8437.62	3386.10	3.55	3389.65	2853.0	11.37	2.01	3391.66	.00	3.86		7.00	60.00	3.00	0	.00
0	28.33	.01232					.01116	.32			3.52			3.00		
0	8465.94	3386.45	3.70	3390.15	2853.0	10.84	1.83	3391.98	.00	3.86		7.00	60.00	3.00	0	.00
0	4.06	.01232					.00966	.04			3.52			3.00		
0	8470.00	3386.50	3.86	3390.36	2853.0	10.34	1.66	3392.02	.00	3.86		7.00	60.00	3.00	0	.00
O	JUNCT STR	.19995					.05634	.06						3.00		
0	8471.00	3386.70	5.34	3392.04	1833.0	4.51	.32	3392.36	.00	2.92		7.00	60.00	3.00	0	.00
0	18.91	.01053					.00126	.02			2.85			3.00		
0	8489.91	3386.90	5.14	3392.04	1833.0	4.73	.35	3392.38	.00	2.92		7.00	60.00	3.00	0	.00
0	18.19	.01053					.00145	.03			2.85			3.00		
0	8508.09	3387.09	4.94	3392.03	1833.0	4.96	.38	3392.41	.00	2.92		7.00	60.00	3.00	0	.00
0	17.48	.01053					.00167	.03			2.85			3.00		
0	8525.57	3387.27	4.74	3392.02	1833.0	5.21	.42	3392.44	.00	2.92		7.00	60.00	3.00	0	.00
0	16.78	.01053					.00193	.03			2.85			3.00		

WATER SURFACE PROFILE LISTING

KINGMAN MASTER DRAINAGE PLAN

LINE An

Q100

O	STATION	INVERT ELEV	DEPTH OF FLOW	W.S. ELEV	Q	VEL	VEL HEAD	ENERGY GRD.EL.	SUPER ELEV	CRITICAL DEPTH		HGT/ DIA	BASE/ ID NO.	ZL	NO PIER	AVBPR
O	L/ELEM	SO					SF AVE	HF			NORM DEPTH			ZR		
0	8542.35	3387.45	4.56	3392.01	1833.0	5.46	.46	3392.47	.00	2.92		7.00	60.00	3.00	0	.00
0	16.09	.01053					.00222	.04			2.85			3.00		
0	8558.45	3387.62	4.38	3392.00	1833.0	5.73	.51	3392.51	.00	2.92		7.00	60.00	3.00	0	.00
0	15.41	.01053					.00256	.04			2.85			3.00		
0	8573.86	3387.78	4.20	3391.99	1833.0	6.01	.56	3392.55	.00	2.92		7.00	60.00	3.00	0	.00
0	14.73	.01053					.00295	.04			2.85			3.00		
0	8588.59	3387.94	4.04	3391.97	1833.0	6.30	.62	3392.59	.00	2.92		7.00	60.00	3.00	0	.00
0	14.05	.01053					.00340	.05			2.85			3.00		
0	8602.63	3388.09	3.87	3391.96	1833.0	6.61	.68	3392.64	.00	2.92		7.00	60.00	3.00	0	.00
0	13.36	.01053					.00393	.05			2.85			3.00		
0	8615.99	3388.23	3.72	3391.94	1833.0	6.93	.75	3392.69	.00	2.92		7.00	60.00	3.00	0	.00
0	12.64	.01053					.00453	.06			2.85			3.00		
0	8628.63	3388.36	3.57	3391.93	1833.0	7.27	.82	3392.75	.00	2.92		7.00	60.00	3.00	0	.00
0	11.88	.01053					.00523	.06			2.85			3.00		
0	8640.51	3388.48	3.42	3391.91	1833.0	7.62	.90	3392.81	.00	2.92		7.00	60.00	3.00	0	.00
0	11.02	.01053					.00604	.07			2.85			3.00		
0	8651.53	3388.60	3.28	3391.88	1833.0	7.99	.99	3392.88	.00	2.92		7.00	60.00	3.00	0	.00
0	9.95	.01053					.00698	.07			2.85			3.00		
0	8661.48	3388.71	3.15	3391.85	1833.0	8.38	1.09	3392.95	.00	2.92		7.00	60.00	3.00	0	.00
0	8.30	.01053					.00807	.07			2.85			3.00		
0	8669.77	3388.79	3.02	3391.81	1833.0	8.79	1.20	3393.01	.00	2.92		7.00	60.00	3.00	0	.00
0	1.86	.01053					.00880	.02			2.85			3.00		
0	8671.64	3388.81	2.99	3391.80	1833.0	8.89	1.23	3393.03	.00	2.92		7.00	60.00	3.00	0	.00
OHYDRAULIC JUMP														3.00		
0	8671.64	3388.81	2.85	3391.66	1833.0	9.37	1.37	3393.03	.00	2.92		7.00	60.00	3.00	0	.00
0	1433.44	.01053					.01053	15.09			2.85			3.00		
0	10105.08	3403.90	2.85	3406.75	1833.0	9.37	1.37	3408.12	.00	2.92		7.00	60.00	3.00	0	.00
0	18.92	.01053					.01108	.21			2.85			3.00		
0	10124.00	3404.10	2.77	3406.87	1833.0	9.69	1.46	3408.33	.00	2.92		7.00	60.00	3.00	0	.00
0	1971.65	.01163					.01164	22.95			2.77			3.00		
0	12095.65	3427.02	2.77	3429.79	1833.0	9.69	1.46	3431.25	.00	2.92		7.00	60.00	3.00	0	.00
0	32.35	.01163					.01250	.40			2.77			3.00		
0	12128.00	3427.40	2.66	3430.06	1833.0	10.13	1.60	3431.66	.00	2.92		7.00	60.00	3.00	0	.00
0	1782.75	.01335					.01336	23.81			2.66			3.00		

WATER SURFACE PROFILE LISTING

KINGMAN MASTER DRAINAGE PLAN

LINE An

Q100

0 STATION / L/ELEM	INVERT ELEV / SO	DEPTH OF FLOW	W.S. ELEV	Q	VEL	VEL HEAD / SF AVE	ENERGY GRD.EL. / HF	SUPER ELEV	CRITICAL DEPTH / NORM DEPTH	HGT/ DIA	BASE/ ID NO. / ZR	ZL	NO PIER	AVBPR
0 13910.75	3451.21	2.66	3453.87	1833.0	10.13	1.60	3455.46	.00	2.92	7.00	60.00	3.00	0	.00
0 41.54	.01335					.01373	.57		2.66			3.00		
0 13952.29	3451.76	2.62	3454.38	1833.0	10.31	1.65	3456.03	.00	2.92	7.00	60.00	3.00	0	.00
0 29.84	.01335					.01522	.45		2.66			3.00		
0 13982.13	3452.16	2.51	3454.67	1833.0	10.82	1.82	3456.49	.00	2.92	7.00	60.00	3.00	0	.00
0 17.87	.01335					.01763	.31		2.66			3.00		
0 14000.00	3452.40	2.40	3454.80	1833.0	11.34	2.00	3456.80	.00	2.92	7.00	60.00	3.00	0	.00
0 1000.00	.01890					.01892	18.92		2.40			3.00		
0 15000.00	3471.30	2.40	3473.70	1833.0	11.34	2.00	3475.70	.00	2.92	7.00	60.00	3.00	0	.00
0 1000.00	.01890					.01892	18.92		2.40			3.00		
0 16000.00	3490.20	2.40	3492.60	1833.0	11.34	2.00	3494.60	.00	2.92	7.00	60.00	3.00	0	.00
0 .00	.01890					.01892	.00		2.40			3.00		
0 16000.00	3490.20	2.40	3492.60	1833.0	11.34	2.00	3494.60	.00	2.92	7.00	60.00	3.00	0	.00
0 899.07	.01890					.01892	17.01		2.40			3.00		
0 16899.06	3507.19	2.40	3509.60	1833.0	11.34	2.00	3511.60	.00	2.92	7.00	60.00	3.00	0	.00
0 62.36	.01890					.01818	1.13		2.40			3.00		
0 16961.42	3508.37	2.46	3510.83	1833.0	11.05	1.90	3512.73	.00	2.92	7.00	60.00	3.00	0	.00
0 24.49	.01890					.01626	.40		2.40			3.00		
0 16985.92	3508.83	2.57	3511.40	1833.0	10.54	1.73	3513.13	.00	2.92	7.00	60.00	3.00	0	.00
0 9.21	.01890					.01404	.13		2.40			3.00		
0 16995.13	3509.01	2.68	3511.69	1833.0	10.05	1.57	3513.26	.00	2.92	7.00	60.00	3.00	0	.00
0 3.85	.01890					.01213	.05		2.40			3.00		
0 16998.98	3509.08	2.80	3511.88	1833.0	9.58	1.43	3513.30	.00	2.92	7.00	60.00	3.00	0	.00
0 1.02	.01890					.01047	.01		2.40			3.00		
0 17000.00	3509.10	2.92	3512.02	1833.0	9.13	1.30	3513.32	.00	2.92	7.00	60.00	3.00	0	.00
1														

WATER SURFACE PROFILE LISTING

KINGMAN MASTER DRAINAGE PLAN
Line Ao Bull Mountain
Q100

O STATION / O L/ELEM	INVERT ELEV / SO	DEPTH OF FLOW	W.S. ELEV	Q	VEL	VEL HEAD / SF AVE	ENERGY GRD.EL. / HF	SUPER ELEV	CRITICAL DEPTH / NORM DEPTH	HGT/ DIA	BASE/ ID NO.	ZL / ZR	NO PIER	AVBPR
0 .00	3350.00	3.40	3353.40	3234.0	11.86	2.19	3355.59	.00	3.82	10.00	70.00	3.00	0	.00
0 5468.61	.01338					.01338	73.18		3.40			3.00		
0 5468.61	3423.17	3.40	3426.57	3234.0	11.86	2.19	3428.76	.00	3.82	10.00	70.00	3.00	0	.00
0 71.14	.01338					.01403	1.00		3.40			3.00		
0 5539.75	3424.12	3.31	3427.43	3234.0	12.23	2.32	3429.76	.00	3.82	10.00	70.00	3.00	0	.00
0 38.74	.01338					.01582	.61		3.40			3.00		
0 5578.49	3424.64	3.17	3427.81	3234.0	12.82	2.56	3430.37	.00	3.82	10.00	70.00	3.00	0	.00
0 24.95	.01338					.01832	.46		3.40			3.00		
0 5603.44	3424.98	3.04	3428.02	3234.0	13.45	2.81	3430.83	.00	3.82	10.00	70.00	3.00	0	.00
0 19.64	.01338					.02121	.42		3.40			3.00		
0 5623.08	3425.24	2.91	3428.15	3234.0	14.11	3.09	3431.24	.00	3.82	10.00	70.00	3.00	0	.00
0 16.70	.01338					.02456	.41		3.40			3.00		
0 5639.78	3425.46	2.79	3428.25	3234.0	14.79	3.40	3431.65	.00	3.82	10.00	70.00	3.00	0	.00
0 14.74	.01338					.02846	.42		3.40			3.00		
0 5654.52	3425.66	2.67	3428.33	3234.0	15.52	3.74	3432.07	.00	3.82	10.00	70.00	3.00	0	.00
0 13.31	.01338					.03299	.44		3.40			3.00		
0 5667.83	3425.84	2.56	3428.40	3234.0	16.27	4.12	3432.51	.00	3.82	10.00	70.00	3.00	0	.00
0 12.17	.01338					.03825	.47		3.40			3.00		
0 5680.00	3426.00	2.45	3428.45	3234.0	17.07	4.53	3432.98	.00	3.82	10.00	70.00	3.00	0	.00
OTRANS STR	.02500					.00993	.20					3.00		
0 5700.00	3426.50	2.41	3428.91	3234.0	16.62	4.29	3433.20	.00	3.71	10.00	76.00	2.00	0	.00
0 WALL EXIT												2.00		
0 5700.00	3426.50	2.85	3429.35	3234.0	16.19	4.07	3433.43	.00	4.05	5.00	76.00	.00	6	1.00
0 WALL EXIT												.00		
0 5700.00	3426.50	2.85	3429.35	3234.0	16.19	4.07	3433.43	.00	4.05	5.00	76.00	.00	6	1.00
0 9.51	.01875					.01026	.10		2.33			.00		
0 5709.51	3426.68	2.90	3429.58	3234.0	15.94	3.95	3433.52	.00	4.05	5.00	76.00	.00	6	1.00
0 23.24	.01875					.00940	.22		2.33			.00		
0 5732.75	3427.11	3.04	3430.15	3234.0	15.19	3.59	3433.74	.00	4.05	5.00	76.00	.00	6	1.00
0 16.88	.01875					.00821	.14		2.33			.00		
0 5749.63	3427.43	3.19	3430.62	3234.0	14.49	3.26	3433.88	.00	4.05	5.00	76.00	.00	6	1.00
0 12.18	.01875					.00718	.09		2.33			.00		
0 5761.81	3427.66	3.34	3431.00	3234.0	13.81	2.97	3433.97	.00	4.05	5.00	76.00	.00	6	1.00
0 8.53	.01875					.00629	.05		2.33			.00		

WATER SURFACE PROFILE LISTING

KINGMAN MASTER DRAINAGE PLAN

Line Ao Bull Mountain

Q100

O	STATION	INVERT ELEV	DEPTH OF FLOW	W.S. ELEV	Q	VEL	VEL HEAD	ENERGY GRD.EL.	SUPER ELEV	CRITICAL DEPTH		HGT/ DIA	BASE/ ID NO.	ZL	NO PIER	AVBPR
O	L/ELEM	SO					SF AVE	HF			NORM DEPTH			ZR		
0	5770.34	3427.82	3.51	3431.33	3234.0	13.17	2.70	3434.02	.00	4.05		5.00	76.00	.00	6	1.00
0	5.58	.01875					.00550	.03			2.33			.00		
0	5775.92	3427.92	3.68	3431.60	3234.0	12.56	2.45	3434.05	.00	4.05		5.00	76.00	.00	6	1.00
0	3.10	.01875					.00482	.01			2.33			.00		
0	5779.02	3427.98	3.86	3431.84	3234.0	11.97	2.23	3434.07	.00	4.05		5.00	76.00	.00	6	1.00
0	.98	.01875					.00423	.00			2.33			.00		
0	5780.00	3428.00	4.05	3432.05	3234.0	11.41	2.02	3434.07	.00	4.05		5.00	76.00	.00	6	1.00
0	WALL ENTRANCE													.00		
0	5780.00	3428.00	6.42	3434.42	3234.0	5.67	.50	3434.92	.00	3.71		10.00	76.00	2.00	0	.00
0	5780.00	3428.00	3.46	3431.46	3234.0	26.76	11.13	3442.59	.00	6.36		10.00	28.00	2.00	0	.00
0	379.84	.01936					.01788	6.79			3.42			2.00		
0	6159.84	3435.35	3.55	3438.90	3234.0	25.97	10.48	3449.38	.00	6.36		10.00	28.00	2.00	0	.00
0	240.16	.01936					.01598	3.84			3.42			2.00		
0	6400.00	3440.00	3.69	3443.69	3234.0	18.49	5.31	3449.01	.00	5.35		10.00	40.00	2.00	0	.00
0	330.05	.01375					.01353	4.47			3.69			2.00		
0	6730.05	3444.54	3.72	3448.26	3234.0	18.31	5.21	3453.47	.00	5.35		10.00	40.00	2.00	0	.00
0	244.71	.01375					.01245	3.05			3.69			2.00		
0	6974.76	3447.90	3.88	3451.78	3234.0	17.46	4.74	3456.52	.00	5.35		10.00	40.00	2.00	0	.00
0	91.13	.01375					.01080	.98			3.69			2.00		
0	7065.89	3449.16	4.04	3453.20	3234.0	16.65	4.31	3457.50	.00	5.35		10.00	40.00	2.00	0	.00
0	51.10	.01375					.00937	.48			3.69			2.00		
0	7116.99	3449.86	4.21	3454.07	3234.0	15.87	3.92	3457.98	.00	5.35		10.00	40.00	2.00	0	.00
0	32.42	.01375					.00813	.26			3.69			2.00		
0	7149.41	3450.30	4.38	3454.69	3234.0	15.13	3.56	3458.25	.00	5.35		10.00	40.00	2.00	0	.00
0	21.45	.01375					.00706	.15			3.69			2.00		
0	7170.86	3450.60	4.56	3455.16	3234.0	14.43	3.24	3458.40	.00	5.35		10.00	40.00	2.00	0	.00
0	14.13	.01375					.00614	.09			3.69			2.00		
0	7184.99	3450.79	4.75	3455.54	3234.0	13.76	2.94	3458.48	.00	5.35		10.00	40.00	2.00	0	.00
0	8.82	.01375					.00533	.05			3.69			2.00		
0	7193.81	3450.91	4.94	3455.86	3234.0	13.12	2.67	3458.53	.00	5.35		10.00	40.00	2.00	0	.00
0	4.74	.01375					.00464	.02			3.69			2.00		
0	7198.55	3450.98	5.14	3456.12	3234.0	12.51	2.43	3458.55	.00	5.35		10.00	40.00	2.00	0	.00
0	1.45	.01375					.00403	.01			3.69			2.00		
0	7200.00	3451.00	5.35	3456.35	3234.0	11.92	2.21	3458.56	.00	5.35		10.00	40.00	2.00	0	.00

WATER SURFACE PROFILE LISTING

KINGMAN MASTER DRAINAGE PLAN

Line Ao Bull Mountain

Q100

0 STATION / 0 L/ELEM	INVERT ELEV / SO	DEPTH OF FLOW	W.S. ELEV	Q	VEL	VEL HEAD / SF AVE	ENERGY GRD.EL. / HF	SUPER ELEV	CRITICAL DEPTH / NORM DEPTH	HGT/ DIA	BASE/ ID NO.	ZL / ZR	NO PIER	AVBPR
0JUNCT STR	.05000					.05715	.57					2.00		
0 7210.00	3451.50	7.39	3458.89	2133.0	6.44	.64	3459.54	.00	4.82	8.00	30.00	2.00	0	.00
0 7.23	.02133					.00087	.01		2.98			2.00		
0 7217.23	3451.65	7.20	3458.85	2133.0	6.68	.69	3459.54	.00	4.82	8.00	30.00	2.00	0	.00
0HYDRAULIC JUMP												2.00		
0 7217.23	3451.65	2.98	3454.64	2133.0	19.87	6.13	3460.77	.00	4.82	8.00	30.00	2.00	0	.00
0 2466.93	.02133					.02133	52.62		2.98			2.00		
0 9684.16	3504.26	2.98	3507.25	2133.0	19.87	6.13	3513.38	.00	4.82	8.00	30.00	2.00	0	.00
0 315.84	.02133					.02115	6.68		2.98			2.00		
0 10000.00	3511.00	3.00	3514.00	2133.0	19.75	6.06	3520.06	.00	4.82	8.00	30.00	2.00	0	.00
1														

WATER SURFACE PROFILE LISTING

KINGMAN MASTER DRAINAGE PLAN

Line Ap

Q100

O STATION	INVERT ELEV	DEPTH OF FLOW	W.S. ELEV	Q	VEL	VEL HEAD	ENERGY GRD.EL.	SUPER ELEV	CRITICAL DEPTH		HGT/ DIA	BASE/ ID NO.	ZL	NO PIER	AVBPR
O L/ELEM	SO					SF AVE	HF			NORM DEPTH			ZR		
0 .00	3420.00	4.00	3424.00	379.0	4.31	.29	3424.29	.00	2.70		6.00	10.00	3.00	0	.00
0 10.28	.01143					.00239	.02			2.68			3.00		
0 10.28	3420.12	3.88	3424.00	379.0	4.52	.32	3424.31	.00	2.70		6.00	10.00	3.00	0	.00
0 9.98	.01143					.00272	.03			2.68			3.00		
0 20.26	3420.23	3.76	3423.99	379.0	4.74	.35	3424.34	.00	2.70		6.00	10.00	3.00	0	.00
0 9.69	.01143					.00310	.03			2.68			3.00		
0 29.95	3420.34	3.64	3423.99	379.0	4.97	.38	3424.37	.00	2.70		6.00	10.00	3.00	0	.00
0 9.39	.01143					.00353	.03			2.68			3.00		
0 39.34	3420.45	3.53	3423.98	379.0	5.21	.42	3424.40	.00	2.70		6.00	10.00	3.00	0	.00
0 9.10	.01143					.00402	.04			2.68			3.00		
0 48.45	3420.55	3.42	3423.98	379.0	5.47	.46	3424.44	.00	2.70		6.00	10.00	3.00	0	.00
0 8.81	.01143					.00457	.04			2.68			3.00		
0 57.26	3420.65	3.31	3423.97	379.0	5.73	.51	3424.48	.00	2.70		6.00	10.00	3.00	0	.00
0 8.51	.01143					.00521	.04			2.68			3.00		
0 65.77	3420.75	3.21	3423.96	379.0	6.01	.56	3424.52	.00	2.70		6.00	10.00	3.00	0	.00
0 8.21	.01143					.00593	.05			2.68			3.00		
0 73.98	3420.85	3.11	3423.95	379.0	6.31	.62	3424.57	.00	2.70		6.00	10.00	3.00	0	.00
0 7.89	.01143					.00676	.05			2.68			3.00		
0 81.87	3420.94	3.01	3423.95	379.0	6.61	.68	3424.63	.00	2.70		6.00	10.00	3.00	0	.00
0 7.53	.01143					.00771	.06			2.68			3.00		
0 89.40	3421.02	2.91	3423.94	379.0	6.94	.75	3424.68	.00	2.70		6.00	10.00	3.00	0	.00
0 7.06	.01143					.00878	.06			2.68			3.00		
0 96.46	3421.10	2.82	3423.92	379.0	7.27	.82	3424.75	.00	2.70		6.00	10.00	3.00	0	.00
0 6.13	.01143					.01001	.06			2.68			3.00		
0 102.59	3421.17	2.73	3423.90	379.0	7.63	.90	3424.81	.00	2.70		6.00	10.00	3.00	0	.00
0 .62	.01143					.01090	.01			2.68			3.00		
0 103.21	3421.18	2.70	3423.88	379.0	7.75	.93	3424.81	.00	2.70		6.00	10.00	3.00	0	.00
OHYDRAULIC JUMP													3.00		
0 103.21	3421.18	2.68	3423.86	379.0	7.83	.95	3424.81	.00	2.70		6.00	10.00	3.00	0	.00
0 3394.97	.01143					.01144	38.83			2.68			3.00		
0 3498.18	3459.98	2.68	3462.66	379.0	7.83	.95	3463.61	.00	2.70		6.00	10.00	3.00	0	.00
0 1.82	.01143					.01129	.02			2.68			3.00		
0 3500.00	3460.00	2.70	3462.70	379.0	7.75	.93	3463.63	.00	2.70		6.00	10.00	3.00	0	.00
1															

WATER SURFACE PROFILE LISTING

KINGMAN MASTER DRAINAGE PLAN

RAILWAY 50 - 150

Q100

O STATION / O L/ELEM	INVERT ELEV / SO	DEPTH OF FLOW	W.S. ELEV	Q	VEL	VEL HEAD / SF AVE	ENERGY GRD.EL. / HF	SUPER ELEV	CRITICAL DEPTH / NORM DEPTH	HGT/ DIA	BASE/ ID NO.	ZL / ZR	NO PIER	AVBPR
0 .00	3282.00	5.79	3287.79	12068.0	14.14	3.11	3290.90	.00	6.14	10.00	130.00	3.00	0	.00
0 6097.51	.00922					.00923	56.25		5.79			3.00		
0 6097.51	3338.24	5.79	3344.03	12068.0	14.14	3.11	3347.14	.00	6.14	10.00	130.00	3.00	0	.00
0 65.38	.00922					.00900	.59		5.79			3.00		
0 6162.88	3338.84	5.88	3344.72	12068.0	13.90	3.00	3347.73	.00	6.14	10.00	130.00	3.00	0	.00
0 17.12	.00922					.00817	.14		5.79			3.00		
0 6180.00	3339.00	6.14	3345.14	12068.0	13.25	2.73	3347.87	.00	6.14	10.00	130.00	3.00	0	.00
OJUNCT STR	.10000					.04888	.98					3.00		
0 6200.00	3341.00	7.77	3348.77	7316.0	6.14	.59	3349.36	.00	4.46	10.00	130.00	3.00	0	.00
0 10.85	.02500					.00132	.01		3.22			3.00		
0 6210.85	3341.27	7.46	3348.73	7316.0	6.44	.64	3349.37	.00	4.46	10.00	130.00	3.00	0	.00
0 9.15	.02500					.00152	.01		3.22			3.00		
0 6220.00	3341.50	7.18	3348.68	7316.0	8.38	1.09	3349.77	.00	5.21	10.00	100.00	3.00	0	.00
0 88.71	.00481					.00282	.25		6.04			3.00		
0 6308.71	3341.93	6.90	3348.82	7316.0	8.79	1.20	3350.02	.00	5.21	10.00	100.00	3.00	0	.00
0 99.86	.00481					.00325	.33		6.04			3.00		
0 6408.56	3342.41	6.62	3349.03	7316.0	9.22	1.32	3350.35	.00	5.21	10.00	100.00	3.00	0	.00
0 126.43	.00481					.00375	.47		6.04			3.00		
0 6534.99	3343.02	6.36	3349.37	7316.0	9.67	1.45	3350.82	.00	5.21	10.00	100.00	3.00	0	.00
0 231.23	.00481					.00433	1.00		6.04			3.00		
0 6766.22	3344.13	6.10	3350.23	7316.0	10.14	1.60	3351.83	.00	5.21	10.00	100.00	3.00	0	.00
0 289.10	.00481					.00473	1.37		6.04			3.00		
0 7055.33	3345.52	6.04	3351.56	7316.0	10.26	1.64	3353.19	.00	5.21	10.00	100.00	3.00	0	.00
0 6124.67	.00481					.00481	29.49		6.04			3.00		
0 13180.00	3375.00	6.04	3381.04	7316.0	10.26	1.64	3382.67	.00	5.21	10.00	100.00	3.00	0	.00
OJUNCT STR	.10000					.03549	.71					3.00		
0 13200.00	3377.00	5.87	3382.87	3980.0	5.77	.52	3383.38	.00	3.53	10.00	100.00	3.00	0	.00
0 8.02	.02500					.00170	.01		2.61			3.00		
0 13208.02	3377.20	5.63	3382.83	3980.0	6.05	.57	3383.40	.00	3.53	10.00	100.00	3.00	0	.00
0 7.51	.02500					.00196	.01		2.61			3.00		
0 13215.53	3377.39	5.40	3382.78	3980.0	6.35	.63	3383.41	.00	3.53	10.00	100.00	3.00	0	.00
0 4.47	.02500					.00220	.01		2.61			3.00		
0 13220.00	3377.50	5.26	3382.76	3980.0	6.54	.66	3383.42	.00	3.53	10.00	100.00	3.00	0	.00
0 .00	.02500					.00520	.00		2.61			3.00		

WATER SURFACE PROFILE LISTING

KINGMAN MASTER DRAINAGE PLAN

RAILWAY 50 - 150

Q100

O STATION / O L/ELEM	INVERT ELEV / SO	DEPTH OF FLOW	W.S. ELEV	Q	VEL	VEL HEAD / SF AVE	ENERGY GRD.EL. / HF	SUPER ELEV	CRITICAL DEPTH / NORM DEPTH	HGT/ DIA	BASE/ ID NO.	ZL / ZR	NO PIER	AVBPR
0 13220.00	3377.50	5.26	3382.76	3980.0	11.51	2.06	3384.82	.00	5.21	10.00	50.00	3.00	0	.00
0 27.28	.00691					.00757	.21		5.49			3.00		
0 13247.28	3377.69	5.46	3383.15	3980.0	10.98	1.87	3385.02	.00	5.21	10.00	50.00	3.00	0	.00
0 66.00	.00691					.00698	.46		5.49			3.00		
0 13313.29	3378.14	5.49	3383.64	3980.0	10.90	1.85	3385.48	.00	5.21	10.00	50.00	3.00	0	.00
0 4466.71	.00691					.00691	30.86		5.49			3.00		
0 17780.00	3409.00	5.49	3414.49	3980.0	10.90	1.85	3416.34	.00	5.21	10.00	50.00	3.00	0	.00
OJUNCT STR	.10000					.04937	.99					3.00		
0 17800.00	3411.00	6.23	3417.23	2675.0	6.26	.61	3417.83	.00	4.09	10.00	50.00	3.00	0	.00
0 7.38	.02500					.00212	.02		3.05			3.00		
0 17807.38	3411.18	6.00	3417.18	2675.0	6.56	.67	3417.85	.00	4.09	10.00	50.00	3.00	0	.00
0 6.89	.02500					.00244	.02		3.05			3.00		
0 17814.27	3411.36	5.77	3417.13	2675.0	6.88	.74	3417.87	.00	4.09	10.00	50.00	3.00	0	.00
0 5.73	.02500					.00277	.02		3.05			3.00		
0 17820.00	3411.50	5.58	3417.08	2675.0	7.18	.80	3417.88	.00	4.09	10.00	50.00	3.00	0	.00
0 -.00	.02500					.00361	.00		3.05			3.00		
0 17820.00	3411.50	5.58	3417.08	2675.0	8.45	1.11	3418.19	.00	4.59	8.00	40.00	3.00	0	.00
0 41.91	.00677					.00459	.19		4.93			3.00		
0 17861.91	3411.78	5.38	3417.16	2675.0	8.86	1.22	3418.38	.00	4.59	8.00	40.00	3.00	0	.00
0 49.06	.00677					.00526	.26		4.93			3.00		
0 17910.97	3412.12	5.18	3417.30	2675.0	9.29	1.34	3418.64	.00	4.59	8.00	40.00	3.00	0	.00
0 75.45	.00677					.00603	.46		4.93			3.00		
0 17986.42	3412.63	4.99	3417.62	2675.0	9.74	1.48	3419.10	.00	4.59	8.00	40.00	3.00	0	.00
0 96.75	.00677					.00661	.64		4.93			3.00		
0 18083.18	3413.28	4.93	3418.21	2675.0	9.92	1.53	3419.74	.00	4.59	8.00	40.00	3.00	0	.00
0 6896.82	.00677					.00678	46.74		4.93			3.00		
0 24980.00	3460.00	4.93	3464.93	2675.0	9.92	1.53	3466.45	.00	4.59	8.00	40.00	3.00	0	.00
OJUNCT STR	.10000					.04379	.88					3.00		
0 25000.00	3462.00	5.43	3467.43	1289.0	4.22	.28	3467.70	.00	2.95	8.00	40.00	3.00	0	.00
0 7.13	.02500					.00118	.01		2.26			3.00		
0 25007.13	3462.18	5.23	3467.41	1289.0	4.43	.30	3467.71	.00	2.95	8.00	40.00	3.00	0	.00
0 6.80	.02500					.00136	.01		2.26			3.00		
0 25013.93	3462.35	5.04	3467.38	1289.0	4.64	.34	3467.72	.00	2.95	8.00	40.00	3.00	0	.00
0 6.07	.02500					.00155	.01		2.26			3.00		

WATER SURFACE PROFILE LISTING

KINGMAN MASTER DRAINAGE PLAN

RAILWAY 50 - 150

Q100

0 STATION / 0 L/ELEM	INVERT ELEV / SO	DEPTH OF FLOW	W.S. ELEV	Q	VEL	VEL HEAD / SF AVE	ENERGY GRD.EL. / HF	SUPER ELEV	CRITICAL DEPTH / NORM DEPTH	HGT/ DIA	BASE/ ID NO.	ZL / ZR	NO PIER	AVBPR
0 25020.00	3462.50	4.86	3467.36	1289.0	4.86	.37	3467.73	.00	2.95	8.00	40.00	3.00	0	.00
0 .00	.02500					.00325	.00		2.26			3.00		
0 25020.00	3462.50	4.86	3467.36	1289.0	7.66	.91	3468.28	.00	4.09	8.00	20.00	3.00	0	.00
0 212.04	.00534					.00509	1.08		4.74			3.00		
0 25232.04	3463.63	4.74	3468.38	1289.0	7.94	.98	3469.36	.00	4.09	8.00	20.00	3.00	0	.00
0 4747.96	.00534					.00534	25.37		4.74			3.00		
0 29980.00	3489.00	4.74	3493.74	1289.0	7.94	.98	3494.72	.00	4.09	8.00	20.00	3.00	0	.00
0JUNCT STR	.10000					.03158	.63					3.00		
0 30000.00	3491.00	4.55	3495.55	300.0	1.96	.06	3495.61	.00	1.74	8.00	20.00	3.00	0	.00
0 5.93	.02500					.00037	.00		1.41			3.00		
0 30005.93	3491.15	4.39	3495.54	300.0	2.06	.07	3495.61	.00	1.74	8.00	20.00	3.00	0	.00
0 5.74	.02500					.00042	.00		1.41			3.00		
0 30011.67	3491.29	4.25	3495.54	300.0	2.16	.07	3495.61	.00	1.74	8.00	20.00	3.00	0	.00
0 5.56	.02500					.00048	.00		1.41			3.00		
0 30017.23	3491.43	4.10	3495.53	300.0	2.26	.08	3495.61	.00	1.74	8.00	20.00	3.00	0	.00
0 2.77	.02500					.00053	.00		1.41			3.00		
0 30020.00	3491.50	4.03	3495.53	300.0	3.37	.18	3495.71	.00	2.38	7.00	10.00	3.00	0	.00
0 160.19	.00210					.00145	.23		3.63			3.00		
0 30180.19	3491.84	3.91	3495.75	300.0	3.53	.19	3495.94	.00	2.38	7.00	10.00	3.00	0	.00
0 219.94	.00210					.00165	.36		3.63			3.00		
0 30400.14	3492.30	3.79	3496.09	300.0	3.70	.21	3496.30	.00	2.38	7.00	10.00	3.00	0	.00
0 419.22	.00210					.00188	.79		3.63			3.00		
0 30819.36	3493.18	3.67	3496.86	300.0	3.88	.23	3497.09	.00	2.38	7.00	10.00	3.00	0	.00
0 696.09	.00210					.00205	1.43		3.63			3.00		
0 31515.45	3494.65	3.63	3498.27	300.0	3.96	.24	3498.52	.00	2.38	7.00	10.00	3.00	0	.00
0 1784.55	.00210					.00210	3.76		3.63			3.00		
0 33300.00	3498.40	3.63	3502.03	300.0	3.96	.24	3502.27	.00	2.38	7.00	10.00	3.00	0	.00

1

WATER SURFACE PROFILE LISTING

KINGMAN MASTER DRAINAGE PLAN

LINE Cb

Q100

O	STATION	INVERT ELEV	DEPTH OF FLOW	W.S. ELEV	Q	VEL	VEL HEAD	ENERGY GRD.EL.	SUPER ELEV	CRITICAL DEPTH		HGT/ DIA	BASE/ ID NO.	ZL	NO PIER	AVBPR
O	L/ELEM	SO					SF AVE	HF			NORM DEPTH			ZR		
0	.00	3381.00	4.00	3385.00	1782.0	8.57	1.14	3386.14	.00	3.59		6.00	40.00	3.00	0	.00
0	11.75	.01011					.00686	.08			3.52			3.00		
0	11.75	3381.12	3.85	3384.97	1782.0	8.99	1.25	3386.22	.00	3.59		6.00	40.00	3.00	0	.00
0	9.79	.01011					.00788	.08			3.52			3.00		
0	21.54	3381.22	3.70	3384.92	1782.0	9.42	1.38	3386.30	.00	3.59		6.00	40.00	3.00	0	.00
0	1.88	.01011					.00855	.02			3.52			3.00		
0	23.42	3381.24	3.67	3384.91	1782.0	9.51	1.41	3386.32	.00	3.59		6.00	40.00	3.00	0	.00
OHYDRAULIC JUMP														3.00		
0	23.42	3381.24	3.52	3384.75	1782.0	10.03	1.56	3386.32	.00	3.59		6.00	40.00	3.00	0	.00
0	8768.93	.01011					.01011	88.69			3.52			3.00		
0	8792.35	3469.92	3.52	3473.44	1782.0	10.03	1.56	3475.00	.00	3.59		6.00	40.00	3.00	0	.00
0	7.65	.01011					.00974	.07			3.52			3.00		
0	8800.00	3470.00	3.59	3473.59	1782.0	9.77	1.48	3475.08	.00	3.59		6.00	40.00	3.00	0	.00
1																

WATER SURFACE PROFILE LISTING

KINGMAN MASTER DRAINAGE PLAN

LINE Cc

Q100

O STATION	INVERT ELEV	DEPTH OF FLOW	W.S. ELEV	Q	VEL	VEL HEAD	ENERGY GRD.EL.	SUPER ELEV	CRITICAL DEPTH		HGT/ DIA	BASE/ ID NO.	ZL	NO PIER	AVBPR
O L/ELEM	SO					SF AVE	HF			NORM DEPTH			ZR		
0 .00	3341.00	4.43	3345.43	4305.0	13.25	2.73	3348.16	.00	4.97		8.00	60.00	3.00	0	.00
0 3085.88	.01254					.01254	38.70			4.43			3.00		
0 3085.88	3379.69	4.43	3384.13	4305.0	13.25	2.73	3386.86	.00	4.97		8.00	60.00	3.00	0	.00
0 81.75	.01254					.01182	.97			4.43			3.00		
0 3167.63	3380.72	4.59	3385.31	4305.0	12.71	2.51	3387.82	.00	4.97		8.00	60.00	3.00	0	.00
0 18.63	.01254					.01036	.19			4.43			3.00		
0 3186.26	3380.95	4.78	3385.73	4305.0	12.12	2.28	3388.01	.00	4.97		8.00	60.00	3.00	0	.00
0 3.74	.01254					.00899	.03			4.43			3.00		
0 3190.00	3381.00	4.97	3385.97	4305.0	11.55	2.07	3388.05	.00	4.97		8.00	60.00	3.00	0	.00
OJUNCT STR	.02000												3.00		
0 3200.00	3381.20	2.12	3383.32	1960.0	13.94	3.02	3386.34	.00	3.05		8.00	60.00	3.00	0	.00
OTRANS STR	.33000					.23822	2.38						3.00		
0 3210.00	3384.50	3.05	3387.55	1960.0	9.31	1.35	3388.89	.00	3.05		8.00	60.00	3.00	0	.00
0 3210.00	3384.50	3.45	3387.95	1960.0	11.29	1.98	3389.93	.00	3.81		6.00	40.00	3.00	0	.00
0 4.87	.01000					.01339	.07			3.72			3.00		
0 3214.87	3384.55	3.41	3387.96	1960.0	11.45	2.04	3389.99	.00	3.81		6.00	40.00	3.00	0	.00
0 15.13	.01000					.01470	.22			3.72			3.00		
0 3230.00	3384.70	3.28	3387.97	1960.0	12.01	2.24	3390.22	.00	3.81		6.00	40.00	3.00	0	.00
0 .00	.01000					.01574	.00			3.72			3.00		
0 3230.00	3384.70	3.28	3387.98	1960.0	12.01	2.24	3390.22	.00	3.81		6.00	40.00	3.00	0	.00
0 7808.23	.01572					.01574	*****			3.28			3.00		
0 11038.23	3507.46	3.28	3510.73	1960.0	12.01	2.24	3512.97	.00	3.81		6.00	40.00	3.00	0	.00
10 71.35	.01572					.01595	1.14			3.28			3.00		
0 11109.59	3508.58	3.25	3511.83	1960.0	12.12	2.28	3514.11	.00	3.81		6.00	40.00	3.00	0	.00
0 60.62	.01572					.01739	1.05			3.28			3.00		
0 11170.20	3509.53	3.12	3512.65	1960.0	12.71	2.51	3515.17	.00	3.81		6.00	40.00	3.00	0	.00
0 29.80	.01572					.02003	.60			3.28			3.00		
0 11200.00	3510.00	3.00	3513.00	1960.0	13.33	2.76	3515.76	.00	3.81		6.00	40.00	3.00	0	.00
1															

WATER SURFACE PROFILE LISTING

KINGMAN MASTER DRAINAGE PLAN

LINE Cd

Q100

O	STATION	INVERT ELEV	DEPTH OF FLOW	W.S. ELEV	Q	VEL	VEL HEAD	ENERGY GRD.EL.	SUPER ELEV	CRITICAL DEPTH		HGT/ DIA	BASE/ ID NO.	ZL	NO PIER	AVBPR
O	L/ELEM	SO					SF AVE	HF			NORM DEPTH			ZR		
0	.00	3382.00	3.93	3385.93	3657.0	12.95	2.61	3388.54	.00	4.50		7.00	60.00	3.00	0	.00
0	41.30	.01375					.01376	.57			3.93			3.00		
0	41.30	3382.57	3.93	3386.50	3657.0	12.95	2.61	3389.11	.00	4.50		7.00	60.00	3.00	0	.00
0	82.80	.01375					.01390	1.15			3.93			3.00		
0	124.10	3383.71	3.91	3387.62	3657.0	13.04	2.64	3390.26	.00	4.50		7.00	60.00	3.00	0	.00
0	78.30	.01375					.01511	1.18			3.93			3.00		
0	202.41	3384.78	3.75	3388.54	3657.0	13.67	2.91	3391.44	.00	4.50		7.00	60.00	3.00	0	.00
0	37.59	.01375					.01744	.66			3.93			3.00		
0	240.00	3385.30	3.60	3388.90	3657.0	14.34	3.20	3392.10	.00	4.50		7.00	60.00	3.00	0	.00
0	619.27	.01869					.01869	11.58			3.60			3.00		
0	859.27	3396.87	3.60	3400.47	3657.0	14.34	3.20	3403.67	.00	4.50		7.00	60.00	3.00	0	.00
0	113.48	.01869					.01785	2.03			3.60			3.00		
0	972.75	3398.99	3.70	3402.69	3657.0	13.89	3.00	3405.70	.00	4.50		7.00	60.00	3.00	0	.00
0	41.64	.01869					.01587	.66			3.60			3.00		
0	1014.39	3399.77	3.86	3403.63	3657.0	13.25	2.73	3406.36	.00	4.50		7.00	60.00	3.00	0	.00
0	17.61	.01869					.01375	.24			3.60			3.00		
0	1032.00	3400.10	4.02	3404.12	3657.0	12.63	2.48	3406.60	.00	4.50		7.00	60.00	3.00	0	.00
0	1023.83	.01277					.01277	13.08			4.02			3.00		
0	2055.83	3413.18	4.02	3417.19	3657.0	12.63	2.48	3419.67	.00	4.50		7.00	60.00	3.00	0	.00
0	80.17	.01277					.01282	1.03			4.02			3.00		
0	2136.00	3414.20	4.01	3418.21	3657.0	12.66	2.49	3420.70	.00	4.50		7.00	60.00	3.00	0	.00
0	988.36	.01286					.01287	12.72			4.01			3.00		
0	3124.36	3426.91	4.01	3430.92	3657.0	12.66	2.49	3433.41	.00	4.50		7.00	60.00	3.00	0	.00
0	115.64	.01286					.01284	1.48			4.01			3.00		
0	3240.00	3428.40	4.01	3432.41	3657.0	12.64	2.48	3434.90	.00	4.50		7.00	60.00	3.00	0	.00
0	729.33	.01280					.01281	9.34			4.01			3.00		
0	3969.33	3437.74	4.01	3441.75	3657.0	12.64	2.48	3444.24	.00	4.50		7.00	60.00	3.00	0	.00
0	98.67	.01280					.01279	1.26			4.01			3.00		
0	4068.00	3439.00	4.02	3443.02	3657.0	12.63	2.48	3445.50	.00	4.50		7.00	60.00	3.00	0	.00
0	1023.66	.01277					.01277	13.07			4.02			3.00		
0	5091.66	3452.07	4.02	3456.09	3657.0	12.63	2.48	3458.57	.00	4.50		7.00	60.00	3.00	0	.00
0	80.34	.01277					.01279	1.03			4.02			3.00		
0	5172.00	3453.10	4.01	3457.11	3657.0	12.64	2.48	3459.60	.00	4.50		7.00	60.00	3.00	0	.00
0	667.89	.01280					.01281	8.55			4.01			3.00		

WATER SURFACE PROFILE LISTING

KINGMAN MASTER DRAINAGE PLAN

LINE Cd

Q100

O	STATION	INVERT ELEV	DEPTH OF FLOW	W.S. ELEV	Q	VEL	VEL HEAD	ENERGY GRD.EL.	SUPER ELEV	CRITICAL DEPTH		HGT/ DIA	BASE/ ID NO.	ZL	NO PIER	AVBPR
O	L/ELEM	SO					SF AVE	HF			NORM DEPTH			ZR		
0	5839.89	3461.65	4.01	3465.67	3657.0	12.64	2.48	3468.15	.00	4.50		7.00	60.00	3.00	0	.00
0	85.77	.01280					.01347	1.16			4.01			3.00		
0	5925.66	3462.75	3.90	3466.65	3657.0	13.06	2.65	3469.30	.00	4.50		7.00	60.00	3.00	0	.00
0	44.84	.01280					.01522	.68			4.01			3.00		
0	5970.50	3463.32	3.75	3467.07	3657.0	13.70	2.92	3469.99	.00	4.50		7.00	60.00	3.00	0	.00
0	29.50	.01280					.01756	.52			4.01			3.00		
0	6000.00	3463.70	3.60	3467.30	3657.0	14.37	3.21	3470.51	.00	4.50		7.00	60.00	3.00	0	.00
0	911.09	.01880					.01882	17.15			3.60			3.00		
0	6911.09	3480.83	3.60	3484.43	3657.0	14.37	3.21	3487.64	.00	4.50		7.00	60.00	3.00	0	.00
0	125.91	.01880					.01864	2.35			3.60			3.00		
0	7037.00	3483.20	3.62	3486.82	3657.0	14.28	3.17	3489.98	.00	4.50		7.00	60.00	3.00	0	.00
0	615.85	.01845					.01846	11.37			3.62			3.00		
0	7652.85	3494.56	3.62	3498.18	3657.0	14.28	3.17	3501.35	.00	4.50		7.00	60.00	3.00	0	.00
0	441.15	.01845					.01845	8.14			3.62			3.00		
0	8094.00	3502.70	3.62	3506.32	3657.0	14.27	3.17	3509.48	.00	4.50		7.00	60.00	3.00	0	.00
0	.00	.01845					.01844	.00			3.62			3.00		
0	8094.00	3502.70	3.62	3506.32	3657.0	14.27	3.17	3509.48	.00	4.50		7.00	60.00	3.00	0	.00
0	650.13	.01843					.01844	11.99			3.62			3.00		
0	8744.13	3514.68	3.62	3518.30	3657.0	14.27	3.17	3521.47	.00	4.50		7.00	60.00	3.00	0	.00
0	103.73	.01843					.01852	1.92			3.62			3.00		
0	8847.86	3516.60	3.61	3520.20	3657.0	14.31	3.18	3523.39	.00	4.50		7.00	60.00	3.00	0	.00
0	107.65	.01843					.02003	2.16			3.62			3.00		
0	8955.51	3518.58	3.46	3522.04	3657.0	15.01	3.50	3525.54	.00	4.50		7.00	60.00	3.00	0	.00
0	44.49	.01843					.02313	1.03			3.62			3.00		
0	9000.00	3519.40	3.32	3522.72	3657.0	15.74	3.85	3526.57	.00	4.50		7.00	60.00	3.00	0	.00
0	872.74	.02480					.02480	21.64			3.32			3.00		
0	9872.74	3541.04	3.32	3544.36	3657.0	15.74	3.85	3548.22	.00	4.50		7.00	60.00	3.00	0	.00
0	127.26	.02480					.02431	3.09			3.32			3.00		
0	10000.00	3544.20	3.36	3547.56	3657.0	15.54	3.75	3551.31	.00	4.50		7.00	60.00	3.00	0	.00
0	646.50	.02380					.02382	15.40			3.36			3.00		
0	10646.50	3559.59	3.36	3562.95	3657.0	15.54	3.75	3566.70	.00	4.50		7.00	60.00	3.00	0	.00
0	175.09	.02380					.02375	4.16			3.36			3.00		
0	10821.59	3563.75	3.36	3567.12	3657.0	15.51	3.74	3570.86	.00	4.50		7.00	60.00	3.00	0	.00
0	116.11	.02380					.02210	2.57			3.36			3.00		

WATER SURFACE PROFILE LISTING

KINGMAN MASTER DRAINAGE PLAN

LINE Cd

Q100

O	STATION	INVERT ELEV	DEPTH OF FLOW	W.S. ELEV	Q	VEL	VEL HEAD	ENERGY GRD.EL.	SUPER ELEV	CRITICAL DEPTH		HGT/ DIA	BASE/ ID NO.	ZL	NO PIER	AVBPR
O	L/ELEM	SO					SF AVE	HF			NORM DEPTH			ZR		
0	10937.69	3566.52	3.51	3570.02	3657.0	14.79	3.40	3573.42	.00	4.50		7.00	60.00	3.00	0	.00
0	34.51	.02380					.01914	.66			3.36			3.00		
0	10972.20	3567.34	3.66	3570.99	3657.0	14.10	3.09	3574.08	.00	4.50		7.00	60.00	3.00	0	.00
0	17.62	.02380					.01658	.29			3.36			3.00		
0	10989.82	3567.76	3.81	3571.57	3657.0	13.44	2.81	3574.38	.00	4.50		7.00	60.00	3.00	0	.00
0	10.18	.02380					.01437	.15			3.36			3.00		
0	11000.00	3568.00	3.97	3571.97	3657.0	12.82	2.55	3574.52	.00	4.50		7.00	60.00	3.00	0	.00
0	425.21	.01333					.01334	5.67			3.97			3.00		
0	11425.21	3573.67	3.97	3577.64	3657.0	12.82	2.55	3580.19	.00	4.50		7.00	60.00	3.00	0	.00
0	95.48	.01333					.01326	1.27			3.97			3.00		
0	11520.69	3574.94	3.98	3578.93	3657.0	12.76	2.53	3581.46	.00	4.50		7.00	60.00	3.00	0	.00
0	62.25	.01333					.01230	.77			3.97			3.00		
0	11582.94	3575.77	4.15	3579.92	3657.0	12.17	2.30	3582.22	.00	4.50		7.00	60.00	3.00	0	.00
0	14.05	.01333					.01067	.15			3.97			3.00		
0	11596.99	3575.96	4.32	3580.28	3657.0	11.60	2.09	3582.37	.00	4.50		7.00	60.00	3.00	0	.00
0	3.01	.01333					.00925	.03			3.97			3.00		
0	11600.00	3576.00	4.50	3580.50	3657.0	11.06	1.90	3582.40	.00	4.50		7.00	60.00	3.00	0	.00
0	1.58	.00071					.00803	.01			8.97			3.00		
0	11601.58	3576.00	4.68	3580.68	3657.0	10.54	1.73	3582.41	.00	4.50		7.00	60.00	3.00	0	.00
0	5.40	.00071					.00697	.04			8.97			3.00		
0	11606.98	3576.01	4.87	3580.88	3657.0	10.05	1.57	3582.45	.00	4.50		7.00	60.00	3.00	0	.00
0	10.26	.00071					.00605	.06			8.97			3.00		
0	11617.24	3576.01	5.07	3581.08	3657.0	9.59	1.43	3582.51	.00	4.50		7.00	60.00	3.00	0	.00
0	16.42	.00071					.00526	.09			8.97			3.00		
0	11633.66	3576.02	5.28	3581.30	3657.0	9.14	1.30	3582.60	.00	4.50		7.00	60.00	3.00	0	.00
0	24.24	.00071					.00457	.11			8.97			3.00		
0	11657.90	3576.04	5.49	3581.53	3657.0	8.71	1.18	3582.71	.00	4.50		7.00	60.00	3.00	0	.00
0	34.19	.00071					.00398	.14			8.97			3.00		
0	11692.09	3576.07	5.71	3581.77	3657.0	8.31	1.07	3582.85	.00	4.50		7.00	60.00	3.00	0	.00
0	46.90	.00071					.00346	.16			8.97			3.00		
0	11738.99	3576.10	5.93	3582.03	3657.0	7.92	.98	3583.01	.00	4.50		7.00	60.00	3.00	0	.00
0	63.25	.00071					.00301	.19			8.97			3.00		
0	11802.24	3576.14	6.17	3582.31	3657.0	7.55	.89	3583.20	.00	4.50		7.00	60.00	3.00	0	.00
0	84.52	.00071					.00262	.22			8.97			3.00		

WATER SURFACE PROFILE LISTING

KINGMAN MASTER DRAINAGE PLAN

LINE Cd

Q100

0 STATION / 0 L/ELEM	INVERT ELEV / SO	DEPTH OF FLOW	W.S. ELEV	Q	VEL	VEL HEAD / SF AVE	ENERGY GRD.EL. / HF	SUPER ELEV	CRITICAL DEPTH / NORM DEPTH	HGT/ DIA	BASE/ ID NO.	ZL / ZR	NO PIER	AVBPR
0 11886.76	3576.20	6.41	3582.61	3657.0	7.20	.81	3583.42	.00	4.50	7.00	60.00	3.00	0	.00
0 112.54	.00071					.00228	.26		8.97			3.00		
0 11999.30	3576.29	6.66	3582.94	3657.0	6.87	.73	3583.68	.00	4.50	7.00	60.00	3.00	0	.00
0 150.19	.00071					.00199	.30		8.97			3.00		
0 12149.49	3576.39	6.92	3583.31	3657.0	6.55	.67	3583.98	.00	4.50	7.00	60.00	3.00	0	.00
0 202.08	.00071					.00173	.35		8.97			3.00		
0 12351.57	3576.54	7.18	3583.72	3657.0	6.24	.61	3584.33	.00	4.50	7.00	60.00	3.00	0	.00
0 276.18	.00071					.00151	.42		8.97			3.00		
0 12627.75	3576.73	7.46	3584.19	3657.0	5.95	.55	3584.74	.00	4.50	7.00	60.00	3.00	0	.00
0 387.56	.00071					.00132	.51		8.97			3.00		
0 13015.31	3577.01	7.74	3584.75	3657.0	5.68	.50	3585.25	.00	4.50	7.00	60.00	3.00	0	.00
0 568.50	.00071					.00115	.65		8.97			3.00		
0 13583.81	3577.42	8.04	3585.45	3657.0	5.41	.46	3585.91	.00	4.50	7.00	60.00	3.00	0	.00
0 816.19	.00071					.00101	.82		8.97			3.00		
0 14400.00	3578.00	8.31	3586.31	3657.0	5.18	.42	3586.73	.00	4.50	7.00	60.00	3.00	0	.00

1

WATER SURFACE PROFILE LISTING

KINGMAN MASTER DRAINAGE PLAN

LINE Ce

Q100

O	STATION	INVERT ELEV	DEPTH OF FLOW	W.S. ELEV	Q	VEL	VEL HEAD	ENERGY GRD.EL.	SUPER ELEV	CRITICAL DEPTH		HGT/ DIA	BASE/ ID NO.	ZL	NO PIER	AVBPR
O	L/ELEM	SO					SF AVE	HF			NORM DEPTH			ZR		
0	.00	3415.00	3.00	3418.00	1235.0	8.40	1.10	3419.10	.00	2.87		6.00	40.00	3.00	0	.00
0	11.81	.00599					.00795	.09			3.31			3.00		
0	11.81	3415.07	3.12	3418.19	1235.0	8.01	1.00	3419.19	.00	2.87		6.00	40.00	3.00	0	.00
0	39.91	.00599					.00690	.28			3.31			3.00		
0	51.71	3415.31	3.25	3418.56	1235.0	7.64	.91	3419.47	.00	2.87		6.00	40.00	3.00	0	.00
0	103.36	.00599					.00620	.64			3.31			3.00		
0	155.07	3415.93	3.31	3419.24	1235.0	7.46	.87	3420.11	.00	2.87		6.00	40.00	3.00	0	.00
0	128.93	.00599					.00599	.77			3.31			3.00		
0	284.00	3416.70	3.31	3420.01	1235.0	7.46	.87	3420.88	.00	2.87		6.00	40.00	3.00	0	.00
0	7.49	.01217					.00644	.05			2.71			3.00		
0	291.49	3416.79	3.18	3419.98	1235.0	7.83	.95	3420.93	.00	2.87		6.00	40.00	3.00	0	.00
0	6.28	.01217					.00742	.05			2.71			3.00		
0	297.78	3416.87	3.06	3419.93	1235.0	8.21	1.05	3420.97	.00	2.87		6.00	40.00	3.00	0	.00
0	1.22	.01217					.00806	.01			2.71			3.00		
0	299.00	3416.88	3.03	3419.92	1235.0	8.29	1.07	3420.98	.00	2.87		6.00	40.00	3.00	0	.00
OHYDRAULIC JUMP														3.00		
0	299.00	3416.88	2.71	3419.59	1235.0	9.47	1.39	3420.99	.00	2.87		6.00	40.00	3.00	0	.00
0	289.00	.01217					.01217	3.52			2.71			3.00		
0	588.00	3420.40	2.71	3423.11	1235.0	9.47	1.39	3424.50	.00	2.87		6.00	40.00	3.00	0	.00
0	537.75	.01217					.01217	6.55			2.71			3.00		
0	1125.75	3426.94	2.71	3429.65	1235.0	9.47	1.39	3431.05	.00	2.87		6.00	40.00	3.00	0	.00
0	26.49	.01217					.01229	.33			2.71			3.00		
0	1152.25	3427.27	2.69	3429.96	1235.0	9.53	1.41	3431.37	.00	2.87		6.00	40.00	3.00	0	.00
0	27.96	.01217					.01336	.37			2.71			3.00		
0	1180.20	3427.61	2.59	3430.19	1235.0	10.00	1.55	3431.75	.00	2.87		6.00	40.00	3.00	0	.00
0	15.80	.01217					.01542	.24			2.71			3.00		
0	1196.00	3427.80	2.48	3430.28	1235.0	10.49	1.71	3431.99	.00	2.87		6.00	40.00	3.00	0	.00
0	841.31	.01652					.01652	13.90			2.48			3.00		
0	2037.31	3441.70	2.48	3444.18	1235.0	10.49	1.71	3445.89	.00	2.87		6.00	40.00	3.00	0	.00
0	54.69	.01652					.01758	.96			2.48			3.00		
0	2092.00	3442.60	2.40	3445.00	1235.0	10.92	1.85	3446.85	.00	2.87		6.00	40.00	3.00	0	.00
0	988.56	.01863					.01865	18.43			2.40			3.00		
0	3080.56	3461.02	2.40	3463.41	1235.0	10.92	1.85	3465.27	.00	2.87		6.00	40.00	3.00	0	.00
0	47.44	.01863					.01873	.89			2.40			3.00		

WATER SURFACE PROFILE LISTING

KINGMAN MASTER DRAINAGE PLAN

LINE Ce

Q100

0 STATION / 0 L/ELEM	INVERT ELEV / SO	DEPTH OF FLOW	W.S. ELEV	Q	VEL	VEL HEAD / SF AVE	ENERGY GRD.EL. / HF	SUPER ELEV	CRITICAL DEPTH / NORM DEPTH	HGT/ DIA	BASE/ ID NO.	ZL / ZR	NO PIER	AVBPR
0 3128.00	3461.90	2.39	3464.29	1235.0	10.95	1.86	3466.15	.00	2.87	6.00	40.00	3.00	0	.00
0 827.55	.01881					.01881	15.57		2.39			3.00		
0 3955.55	3477.46	2.39	3479.85	1235.0	10.95	1.86	3481.72	.00	2.87	6.00	40.00	3.00	0	.00
0 60.45	.01881					.01873	1.13		2.39			3.00		
0 4016.00	3478.60	2.40	3481.00	1235.0	10.92	1.85	3482.85	.00	2.87	6.00	40.00	3.00	0	.00
0 976.17	.01863					.01865	18.20		2.40			3.00		
0 4992.17	3496.79	2.40	3499.18	1235.0	10.92	1.85	3501.04	.00	2.87	6.00	40.00	3.00	0	.00
0 59.83	.01863					.01994	1.19		2.40			3.00		
0 5052.00	3497.90	2.31	3500.21	1235.0	11.40	2.02	3502.23	.00	2.87	6.00	40.00	3.00	0	.00
0 844.78	.02123					.02123	17.94		2.31			3.00		
0 5896.78	3515.84	2.31	3518.15	1235.0	11.40	2.02	3520.17	.00	2.87	6.00	40.00	3.00	0	.00
0 63.87	.02123					.02137	1.37		2.31			3.00		
0 5960.65	3517.19	2.30	3519.49	1235.0	11.45	2.04	3521.53	.00	2.87	6.00	40.00	3.00	0	.00
0 56.29	.02123					.02319	1.31		2.31			3.00		
0 6016.94	3518.39	2.21	3520.60	1235.0	12.01	2.24	3522.84	.00	2.87	6.00	40.00	3.00	0	.00
0 24.06	.02123					.02679	.64		2.31			3.00		
0 6041.00	3518.90	2.12	3521.02	1235.0	12.59	2.46	3523.48	.00	2.87	6.00	40.00	3.00	0	.00
0 933.96	.02871					.02872	26.83		2.12			3.00		
0 6974.96	3545.72	2.12	3547.83	1235.0	12.59	2.46	3550.30	.00	2.87	6.00	40.00	3.00	0	.00
0 62.04	.02871					.02880	1.79		2.12			3.00		
0 7037.00	3547.50	2.11	3549.61	1235.0	12.61	2.47	3552.09	.00	2.87	6.00	40.00	3.00	0	.00
0 .00	.02871					.02887	.00		2.12			3.00		
0 7037.00	3547.50	2.11	3549.61	1235.0	12.61	2.47	3552.09	.00	2.87	6.00	40.00	3.00	0	.00
0 21.99	.02883					.02887	.63		2.11			3.00		
0 7058.99	3548.13	2.11	3550.25	1235.0	12.61	2.47	3552.72	.00	2.87	6.00	40.00	3.00	0	.00
0 72.67	.02883					.02803	2.04		2.11			3.00		
0 7131.66	3550.23	2.15	3552.38	1235.0	12.37	2.38	3554.76	.00	2.87	6.00	40.00	3.00	0	.00
0 35.87	.02883					.02536	.91		2.11			3.00		
0 7167.53	3551.26	2.24	3553.51	1235.0	11.79	2.16	3555.67	.00	2.87	6.00	40.00	3.00	0	.00
0 14.73	.02883					.02196	.32		2.11			3.00		
0 7182.26	3551.69	2.34	3554.03	1235.0	11.24	1.96	3555.99	.00	2.87	6.00	40.00	3.00	0	.00
0 8.14	.02883					.01901	.15		2.11			3.00		

WATER SURFACE PROFILE LISTING

KINGMAN MASTER DRAINAGE PLAN

LINE Ce

Q100

0 STATION	INVERT ELEV	DEPTH OF FLOW	W.S. ELEV	Q	VEL	VEL HEAD	ENERGY GRD.EL.	SUPER ELEV	CRITICAL DEPTH		HGT/ DIA	BASE/ ID NO.	ZL	NO PIER	AVBPR
0 L/ELEM	SO					SF AVE	HF			NORM DEPTH			ZR		
0 7190.40	3551.92	2.44	3554.36	1235.0	10.72	1.79	3556.14	.00	2.87		6.00	40.00	3.00	0	.00
0 4.85	.02883					.01647	.08			2.11			3.00		
0 7195.25	3552.06	2.54	3554.60	1235.0	10.22	1.62	3556.22	.00	2.87		6.00	40.00	3.00	0	.00
0 2.85	.02883					.01427	.04			2.11			3.00		
0 7198.10	3552.15	2.64	3554.79	1235.0	9.75	1.48	3556.26	.00	2.87		6.00	40.00	3.00	0	.00
0 1.47	.02883					.01237	.02			2.11			3.00		
0 7199.56	3552.19	2.75	3554.94	1235.0	9.29	1.34	3556.28	.00	2.87		6.00	40.00	3.00	0	.00
0 .44	.02883					.01072	.00			2.11			3.00		
0 7200.00	3552.20	2.87	3555.07	1235.0	8.86	1.22	3556.29	.00	2.87		6.00	40.00	3.00	0	.00
1															

WATER SURFACE PROFILE LISTING

KINGMAN MASTER DRAINAGE PLAN

LINE Cf

Q100

O STATION	INVERT ELEV	DEPTH OF FLOW	W.S. ELEV	Q	VEL	VEL HEAD	ENERGY GRD.EL.	SUPER ELEV	CRITICAL DEPTH		HGT/ DIA	BASE/ ID NO.	ZL	NO PIER	AVBPR
O L/ELEM	SO					SF AVE	HF			NORM DEPTH			ZR		
0 .00	3472.00	3.50	3475.50	1444.0	8.17	1.04	3476.54	.00	3.16		6.00	40.00	3.00	0	.00
0 11.67	.01000					.00726	.08			3.13			3.00		
0 11.67	3472.12	3.36	3475.48	1444.0	8.57	1.14	3476.62	.00	3.16		6.00	40.00	3.00	0	.00
0 10.35	.01000					.00835	.09			3.13			3.00		
0 22.03	3472.22	3.23	3475.45	1444.0	8.99	1.26	3476.71	.00	3.16		6.00	40.00	3.00	0	.00
0 3.30	.01000					.00919	.03			3.13			3.00		
0 25.32	3472.25	3.18	3475.44	1444.0	9.16	1.30	3476.74	.00	3.16		6.00	40.00	3.00	0	.00
OHYDRAULIC JUMP													3.00		
0 25.32	3472.25	3.13	3475.38	1444.0	9.34	1.36	3476.74	.00	3.16		6.00	40.00	3.00	0	.00
0 21.68	.01000					.01001	.22			3.13			3.00		
0 47.01	3472.47	3.13	3475.60	1444.0	9.34	1.36	3476.96	.00	3.16		6.00	40.00	3.00	0	.00
0 2.99	.01000					.00985	.03			3.13			3.00		
0 50.00	3472.50	3.16	3475.66	1444.0	9.24	1.33	3476.99	.00	3.16		6.00	40.00	3.00	0	.00
0 2.13	.00526					.00905	.02			3.75			3.00		
0 52.13	3472.51	3.29	3475.80	1444.0	8.81	1.21	3477.00	.00	3.16		6.00	40.00	3.00	0	.00
0 9.05	.00526					.00787	.07			3.75			3.00		
0 61.18	3472.56	3.42	3475.98	1444.0	8.40	1.10	3477.08	.00	3.16		6.00	40.00	3.00	0	.00
0 24.26	.00526					.00684	.17			3.75			3.00		
0 85.45	3472.69	3.56	3476.25	1444.0	8.00	1.00	3477.24	.00	3.16		6.00	40.00	3.00	0	.00
0 76.45	.00526					.00594	.45			3.75			3.00		
0 161.90	3473.09	3.70	3476.79	1444.0	7.63	.91	3477.70	.00	3.16		6.00	40.00	3.00	0	.00
0 160.44	.00526					.00540	.87			3.75			3.00		
0 322.34	3473.93	3.75	3477.69	1444.0	7.51	.88	3478.56	.00	3.16		6.00	40.00	3.00	0	.00
0 867.66	.00526					.00526	4.57			3.75			3.00		
0 1190.00	3478.50	3.75	3482.25	1444.0	7.51	.88	3483.13	.00	3.16		6.00	40.00	3.00	0	.00
OTRANS STR	.15000												3.00		
0 1210.00	3481.50	2.64	3484.14	1444.0	11.40	2.02	3486.16	.00	3.16		6.00	40.00	3.00	0	.00
0 10.00	.02000					.01778	.18			2.57			3.00		
0 1220.00	3481.70	2.67	3484.37	1444.0	11.25	1.97	3486.34	.00	3.16		6.00	40.00	3.00	0	.00
0 2259.84	.01743					.01744	39.41			2.67			3.00		
0 3479.84	3521.08	2.67	3523.75	1444.0	11.25	1.97	3525.72	.00	3.16		6.00	40.00	3.00	0	.00
0 66.80	.01743					.01725	1.15			2.67			3.00		
0 3546.65	3522.24	2.69	3524.93	1444.0	11.17	1.94	3526.87	.00	3.16		6.00	40.00	3.00	0	.00
0 43.35	.01743					.01594	.69			2.67			3.00		

WATER SURFACE PROFILE LISTING

KINGMAN MASTER DRAINAGE PLAN

LINE Cf

Q100

O STATION / O L/ELEM	INVERT ELEV / SO	DEPTH OF FLOW	W.S. ELEV	Q	VEL	VEL HEAD / SF AVE	ENERGY GRD.EL. / HF	SUPER ELEV	CRITICAL DEPTH / NORM DEPTH	HGT/ DIA	BASE/ ID NO.	ZL / ZR	NO PIER	AVBPR
0 3590.00	3523.00	2.80	3525.80	1444.0	10.65	1.76	3527.56	.00	3.16	6.00	40.00	3.00	0	.00
OTRANS STR	.15000					.14511	2.90					3.00		
0 3610.00	3526.00	3.02	3529.02	1444.0	9.73	1.47	3530.50	.00	3.16	6.00	40.00	3.00	0	.00
0 10.00	.01001					.01196	.12		3.13			3.00		
0 3620.00	3526.10	2.93	3529.03	1444.0	10.09	1.58	3530.62	.00	3.16	6.00	40.00	3.00	0	.00
0 2737.60	.01260					.01261	34.53		2.93			3.00		
0 6357.60	3560.59	2.93	3563.52	1444.0	10.09	1.58	3565.11	.00	3.16	6.00	40.00	3.00	0	.00
0 32.40	.01260					.01210	.39		2.93			3.00		
0 6390.00	3561.00	3.00	3564.00	1444.0	9.81	1.49	3565.50	.00	3.16	6.00	40.00	3.00	0	.00
OTRANS STR	.15000					.15100	3.02					3.00		
0 6410.00	3564.00	2.76	3566.76	1444.0	10.84	1.83	3568.59	.00	3.16	6.00	40.00	3.00	0	.00
0 10.00	.01001					.01672	.17		3.13			3.00		
0 6420.00	3564.10	2.66	3566.76	1444.0	11.33	2.00	3568.75	.00	3.16	6.00	40.00	3.00	0	.00
0 3861.49	.01781					.01783	68.86		2.66			3.00		
0 10281.49	3632.89	2.66	3635.54	1444.0	11.33	2.00	3637.54	.00	3.16	6.00	40.00	3.00	0	.00
0 66.25	.01781					.01747	1.16		2.66			3.00		
0 10347.74	3634.07	2.69	3636.76	1444.0	11.18	1.94	3638.70	.00	3.16	6.00	40.00	3.00	0	.00
0 35.29	.01781					.01597	.56		2.66			3.00		
0 10383.03	3634.70	2.80	3637.50	1444.0	10.66	1.77	3639.26	.00	3.16	6.00	40.00	3.00	0	.00
0 11.32	.01781					.01386	.16		2.66			3.00		
0 10394.35	3634.90	2.91	3637.81	1444.0	10.16	1.61	3639.42	.00	3.16	6.00	40.00	3.00	0	.00
0 4.50	.01781					.01202	.05		2.66			3.00		
0 10398.85	3634.98	3.03	3638.01	1444.0	9.69	1.46	3639.47	.00	3.16	6.00	40.00	3.00	0	.00
0 1.15	.01781					.01043	.01		2.66			3.00		
0 10400.00	3635.00	3.16	3638.16	1444.0	9.24	1.33	3639.49	.00	3.16	6.00	40.00	3.00	0	.00
1														

WATER SURFACE PROFILE LISTING

KINGMAN MASTER DRAINAGE PLAN

LINE Cg

Q100

O STATION	INVERT ELEV	DEPTH OF FLOW	W.S. ELEV	Q	VEL	VEL HEAD	ENERGY GRD.EL.	SUPER ELEV	CRITICAL DEPTH		HGT/ DIA	BASE/ ID NO.	ZL	NO PIER	AVBPR
O L/ELEM	SO					SF AVE	HF			NORM DEPTH			ZR		
0 .00	3510.00	3.00	3513.00	289.0	1.97	.06	3513.06	.00	1.14		6.00	40.00	3.00	0	.00
0 13.05	.00913					.00050	.01			1.27			3.00		
0 13.05	3510.12	2.88	3513.00	289.0	2.06	.07	3513.07	.00	1.14		6.00	40.00	3.00	0	.00
0 12.62	.00913					.00058	.01			1.27			3.00		
0 25.67	3510.23	2.77	3513.00	289.0	2.16	.07	3513.07	.00	1.14		6.00	40.00	3.00	0	.00
0 12.20	.00913					.00067	.01			1.27			3.00		
0 37.87	3510.35	2.66	3513.00	289.0	2.27	.08	3513.08	.00	1.14		6.00	40.00	3.00	0	.00
0 11.79	.00913					.00077	.01			1.27			3.00		
0 49.66	3510.45	2.55	3513.00	289.0	2.38	.09	3513.09	.00	1.14		6.00	40.00	3.00	0	.00
0 11.40	.00913					.00089	.01			1.27			3.00		
0 61.07	3510.56	2.45	3513.00	289.0	2.49	.10	3513.10	.00	1.14		6.00	40.00	3.00	0	.00
0 11.03	.00913					.00102	.01			1.27			3.00		
0 72.10	3510.66	2.35	3513.01	289.0	2.62	.11	3513.11	.00	1.14		6.00	40.00	3.00	0	.00
0 10.68	.00913					.00118	.01			1.27			3.00		
0 82.78	3510.76	2.25	3513.01	289.0	2.74	.12	3513.13	.00	1.14		6.00	40.00	3.00	0	.00
0 10.35	.00913					.00137	.01			1.27			3.00		
0 93.12	3510.85	2.16	3513.01	289.0	2.88	.13	3513.14	.00	1.14		6.00	40.00	3.00	0	.00
0 10.03	.00913					.00158	.02			1.27			3.00		
0 103.16	3510.94	2.07	3513.01	289.0	3.02	.14	3513.16	.00	1.14		6.00	40.00	3.00	0	.00
0 9.75	.00913					.00183	.02			1.27			3.00		
0 112.91	3511.03	1.99	3513.02	289.0	3.17	.16	3513.17	.00	1.14		6.00	40.00	3.00	0	.00
0 9.49	.00913					.00211	.02			1.27			3.00		
0 122.40	3511.12	1.90	3513.02	289.0	3.32	.17	3513.19	.00	1.14		6.00	40.00	3.00	0	.00
0 9.27	.00913					.00244	.02			1.27			3.00		
0 131.66	3511.20	1.82	3513.03	289.0	3.48	.19	3513.22	.00	1.14		6.00	40.00	3.00	0	.00
0 9.08	.00913					.00283	.03			1.27			3.00		
0 140.75	3511.29	1.75	3513.03	289.0	3.65	.21	3513.24	.00	1.14		6.00	40.00	3.00	0	.00
0 8.96	.00913					.00327	.03			1.27			3.00		
0 149.71	3511.37	1.68	3513.04	289.0	3.83	.23	3513.27	.00	1.14		6.00	40.00	3.00	0	.00
0 8.92	.00913					.00379	.03			1.27			3.00		
0 158.62	3511.45	1.60	3513.05	289.0	4.02	.25	3513.30	.00	1.14		6.00	40.00	3.00	0	.00
0 8.99	.00913					.00439	.04			1.27			3.00		
0 167.61	3511.53	1.54	3513.07	289.0	4.21	.28	3513.34	.00	1.14		6.00	40.00	3.00	0	.00
0 9.28	.00913					.00509	.05			1.27			3.00		

WATER SURFACE PROFILE LISTING

KINGMAN MASTER DRAINAGE PLAN

LINE Cg

Q100

O	STATION	INVERT ELEV	DEPTH OF FLOW	W.S. ELEV	Q	VEL	VEL HEAD	ENERGY GRD.EL.	SUPER ELEV	CRITICAL DEPTH		HGT/ DIA	BASE/ ID NO.	ZL	NO PIER	AVBPR
O	L/ELEM	SO					SF AVE	HF			NORM DEPTH			ZR		
0	176.89	3511.62	1.47	3513.09	289.0	4.42	.30	3513.39	.00	1.14		6.00	40.00	3.00	0	.00
0	9.97	.00913					.00590	.06			1.27			3.00		
0	186.86	3511.71	1.41	3513.12	289.0	4.64	.33	3513.45	.00	1.14		6.00	40.00	3.00	0	.00
0	11.68	.00913					.00685	.08			1.27			3.00		
0	198.53	3511.81	1.35	3513.16	289.0	4.86	.37	3513.53	.00	1.14		6.00	40.00	3.00	0	.00
0	17.64	.00913					.00794	.14			1.27			3.00		
0	216.17	3511.97	1.29	3513.27	289.0	5.10	.40	3513.67	.00	1.14		6.00	40.00	3.00	0	.00
0	25.64	.00913					.00883	.23			1.27			3.00		
0	241.81	3512.21	1.27	3513.47	289.0	5.21	.42	3513.90	.00	1.14		6.00	40.00	3.00	0	.00
0	840.65	.00913					.00914	7.68			1.27			3.00		
0	1082.46	3519.89	1.27	3521.15	289.0	5.21	.42	3521.57	.00	1.14		6.00	40.00	3.00	0	.00
O	HYDRAULIC JUMP													3.00		
0	1082.46	3519.89	1.02	3520.91	289.0	6.56	.67	3521.58	.00	1.14		6.00	40.00	3.00	0	.00
0	1.85	.00913					.02020	.04			1.27			3.00		
0	1084.31	3519.90	.98	3520.89	289.0	6.85	.73	3521.61	.00	1.14		6.00	40.00	3.00	0	.00
0	2.11	.00913					.02334	.05			1.27			3.00		
0	1086.42	3519.92	.94	3520.86	289.0	7.18	.80	3521.66	.00	1.14		6.00	40.00	3.00	0	.00
0	2.17	.00913					.02715	.06			1.27			3.00		
0	1088.59	3519.94	.90	3520.84	289.0	7.53	.88	3521.72	.00	1.14		6.00	40.00	3.00	0	.00
0	2.17	.00913					.03159	.07			1.27			3.00		
0	1090.76	3519.96	.86	3520.82	289.0	7.90	.97	3521.79	.00	1.14		6.00	40.00	3.00	0	.00
0	2.14	.00913					.03677	.08			1.27			3.00		
0	1092.90	3519.98	.82	3520.80	289.0	8.29	1.07	3521.87	.00	1.14		6.00	40.00	3.00	0	.00
0	2.10	.00913					.04280	.09			1.27			3.00		
0	1095.00	3520.00	.79	3520.78	289.0	8.69	1.17	3521.96	.00	1.14		6.00	40.00	3.00	0	.00
O	TRANS STR	.40000					.32828	1.64						3.00		
0	1100.00	3522.00	1.14	3523.14	289.0	5.83	.53	3523.67	.00	1.14		6.00	40.00	3.00	0	.00
0	.88	.00825					.01210	.01			1.30			3.00		
0	1100.88	3522.01	1.19	3523.20	289.0	5.56	.48	3523.68	.00	1.14		6.00	40.00	3.00	0	.00
0	4.56	.00825					.01042	.05			1.30			3.00		
0	1105.43	3522.04	1.25	3523.29	289.0	5.30	.44	3523.73	.00	1.14		6.00	40.00	3.00	0	.00
0	22.10	.00825					.00898	.20			1.30			3.00		
0	1127.54	3522.23	1.30	3523.53	289.0	5.06	.40	3523.93	.00	1.14		6.00	40.00	3.00	0	.00
0	19.08	.00825					.00828	.16			1.30			3.00		

WATER SURFACE PROFILE LISTING

KINGMAN MASTER DRAINAGE PLAN

LINE Cg

Q100

O	STATION	INVERT ELEV	DEPTH OF FLOW	W.S. ELEV	Q	VEL	VEL HEAD	ENERGY GRD.EL.	SUPER ELEV	CRITICAL DEPTH		HGT/ DIA	BASE/ ID NO.	ZL	NO PIER	AVBPR
O	L/ELEM	SO					SF AVE	HF			NORM DEPTH			ZR		
0	1146.61	3522.38	1.30	3523.69	289.0	5.05	.40	3524.08	.00	1.14		6.00	40.00	3.00	0	.00
0	3337.70	.00825					.00826	27.57			1.30			3.00		
0	4484.31	3549.91	1.30	3551.21	289.0	5.05	.40	3551.61	.00	1.14		6.00	40.00	3.00	0	.00
OHYDRAULIC JUMP														3.00		
0	4484.31	3549.91	.99	3550.90	289.0	6.78	.71	3551.62	.00	1.14		6.00	40.00	3.00	0	.00
0	.42	.00825					.02124	.01			1.30			3.00		
0	4484.74	3549.92	.98	3550.90	289.0	6.85	.73	3551.63	.00	1.14		6.00	40.00	3.00	0	.00
0	1.99	.00825					.02334	.05			1.30			3.00		
0	4486.72	3549.93	.94	3550.87	289.0	7.18	.80	3551.67	.00	1.14		6.00	40.00	3.00	0	.00
0	2.07	.00825					.02715	.06			1.30			3.00		
0	4488.79	3549.95	.90	3550.85	289.0	7.53	.88	3551.73	.00	1.14		6.00	40.00	3.00	0	.00
0	2.09	.00825					.03159	.07			1.30			3.00		
0	4490.88	3549.97	.86	3550.83	289.0	7.90	.97	3551.80	.00	1.14		6.00	40.00	3.00	0	.00
0	2.08	.00825					.03677	.08			1.30			3.00		
0	4492.96	3549.98	.82	3550.80	289.0	8.29	1.07	3551.87	.00	1.14		6.00	40.00	3.00	0	.00
0	2.04	.00825					.04280	.09			1.30			3.00		
0	4495.00	3550.00	.79	3550.78	289.0	8.69	1.17	3551.96	.00	1.14		6.00	40.00	3.00	0	.00
OTRANS STR		.40000					.32828	1.64						3.00		
0	4500.00	3552.00	1.14	3553.14	289.0	5.83	.53	3553.67	.00	1.14		6.00	40.00	3.00	0	.00
0	.70	.00731					.01210	.01			1.35			3.00		
0	4500.70	3552.01	1.19	3553.20	289.0	5.56	.48	3553.68	.00	1.14		6.00	40.00	3.00	0	.00
0	3.18	.00731					.01042	.03			1.35			3.00		
0	4503.88	3552.03	1.25	3553.27	289.0	5.30	.44	3553.71	.00	1.14		6.00	40.00	3.00	0	.00
0	9.65	.00731					.00898	.09			1.35			3.00		
0	4513.53	3552.10	1.30	3553.40	289.0	5.06	.40	3553.80	.00	1.14		6.00	40.00	3.00	0	.00
0	37.38	.00731					.00781	.29			1.35			3.00		
0	4550.91	3552.37	1.35	3553.72	289.0	4.85	.37	3554.09	.00	1.14		6.00	40.00	3.00	0	.00
0	1036.93	.00731					.00730	7.57			1.35			3.00		
0	5587.85	3559.95	1.35	3561.30	289.0	4.85	.37	3561.67	.00	1.14		6.00	40.00	3.00	0	.00
OHYDRAULIC JUMP														3.00		
0	5587.85	3559.95	.95	3560.90	289.0	7.10	.78	3561.68	.00	1.14		6.00	40.00	3.00	0	.00
0	1.15	.00731					.02520	.03			1.35			3.00		
0	5589.00	3559.96	.93	3560.88	289.0	7.28	.82	3561.71	.00	1.14		6.00	40.00	3.00	0	.00
0	1.98	.00731					.02832	.06			1.35			3.00		

WATER SURFACE PROFILE LISTING

KINGMAN MASTER DRAINAGE PLAN

LINE Cg

Q100

O	STATION	INVERT ELEV	DEPTH OF FLOW	W.S. ELEV	Q	VEL	VEL HEAD	ENERGY GRD.EL.	SUPER ELEV	CRITICAL DEPTH		HGT/ DIA	BASE/ ID NO.	ZL	NO PIER	AVBPR
O	L/ELEM	SO					SF AVE	HF			NORM DEPTH			ZR		
0	5590.98	3559.97	.89	3560.86	289.0	7.63	.91	3561.76	.00	1.14		6.00	40.00	3.00	0	.00
0	2.01	.00731					.03295	.07			1.35			3.00		
0	5592.99	3559.99	.85	3560.83	289.0	8.01	1.00	3561.83	.00	1.14		6.00	40.00	3.00	0	.00
0	2.01	.00731					.03835	.08			1.35			3.00		
0	5595.00	3560.00	.81	3560.81	289.0	8.40	1.10	3561.91	.00	1.14		6.00	40.00	3.00	0	.00
O	TRANS STR	.40000					.35529	1.78						3.00		
0	5600.00	3562.00	.97	3562.97	289.0	6.96	.75	3563.72	.00	1.14		6.00	40.00	3.00	0	.00
O	TRANS STR	.40000					.13744	.00						3.00		
0	5600.00	3562.00	.97	3562.97	289.0	6.96	.75	3563.72	.00	1.14		6.00	40.00	3.00	0	.00
0	769.15	.02264					.02270	17.46			.97			3.00		
0	6369.15	3579.41	.97	3580.38	289.0	6.96	.75	3581.14	.00	1.14		6.00	40.00	3.00	0	.00
0	1.53	.02264					.02270	.03			.97			3.00		
0	6370.68	3579.45	.97	3580.42	289.0	6.96	.75	3581.17	.00	1.14		6.00	40.00	3.00	0	.00
0	17.19	.02264					.02456	.42			.97			3.00		
0	6387.87	3579.84	.93	3580.76	289.0	7.30	.83	3581.59	.00	1.14		6.00	40.00	3.00	0	.00
0	7.13	.02264					.02857	.20			.97			3.00		
0	6395.00	3580.00	.88	3580.89	289.0	7.66	.91	3581.80	.00	1.14		6.00	40.00	3.00	0	.00
0	.00	.02264					.03073	.00			.97			3.00		
0	6395.00	3580.00	.88	3580.89	289.0	7.66	.91	3581.80	.00	1.14		6.00	40.00	3.00	0	.00
0	1269.19	.03065					.03073	39.00			.88			3.00		
0	7664.19	3618.90	.88	3619.79	289.0	7.66	.91	3620.70	.00	1.14		6.00	40.00	3.00	0	.00
0	19.49	.03065					.03214	.63			.88			3.00		
0	7683.67	3619.50	.86	3620.36	289.0	7.87	.96	3621.32	.00	1.14		6.00	40.00	3.00	0	.00
0	10.33	.03065					.03630	.38			.88			3.00		
0	7694.01	3619.82	.82	3620.64	289.0	8.25	1.06	3621.70	.00	1.14		6.00	40.00	3.00	0	.00
0	5.99	.03065					.04225	.25			.88			3.00		
0	7700.00	3620.00	.79	3620.79	289.0	8.66	1.16	3621.95	.00	1.14		6.00	40.00	3.00	0	.00
O	TRANS STR	.40000					.33091	1.65						3.00		
0	7705.00	3622.00	1.11	3623.11	289.0	5.99	.56	3623.67	.00	1.14		6.00	40.00	3.00	0	.00
0	2693.06	.01410					.01411	37.99			1.11			3.00		
0	10398.06	3659.97	1.11	3661.09	289.0	5.99	.56	3661.64	.00	1.14		6.00	40.00	3.00	0	.00
0	1.94	.01410					.01356	.03			1.11			3.00		
0	10400.00	3660.00	1.14	3661.14	289.0	5.83	.53	3661.67	.00	1.14		6.00	40.00	3.00	0	.00

WATER SURFACE PROFILE LISTING

KINGMAN MASTER DRAINAGE PLAN

LINE Bb (DOWNTOWN)

Q2

O	STATION	INVERT ELEV	DEPTH OF FLOW	W.S. ELEV	Q	VEL	VEL HEAD	ENERGY GRD.EL.	SUPER ELEV	CRITICAL DEPTH		HGT/ DIA	BASE/ ID NO.	ZL	NO PIER	AVBPR
O	L/ELEM	SO					SF AVE	HF			NORM DEPTH			ZR		
0	.00	3252.00	1.79	3253.79	207.0	7.50	.87	3254.67	.00	1.94		6.00	10.00	3.00	0	.00
0	768.78	.01625					.01625	12.49			1.79			3.00		
0	768.78	3264.49	1.79	3266.29	207.0	7.50	.87	3267.16	.00	1.94		6.00	10.00	3.00	0	.00
0	20.95	.01625					.01725	.36			1.79			3.00		
0	789.73	3264.83	1.74	3266.57	207.0	7.81	.95	3267.52	.00	1.94		6.00	10.00	3.00	0	.00
0	10.27	.01625					.01956	.20			1.79			3.00		
0	800.00	3265.00	1.68	3266.68	207.0	8.19	1.04	3267.72	.00	1.94		6.00	10.00	3.00	0	.00
0	.00	.01625					.02087	.00			1.79			3.00		
0	800.00	3265.00	1.68	3266.68	207.0	8.19	1.04	3267.72	.00	1.94		6.00	10.00	3.00	0	.00
0	1161.57	.02083					.02087	24.24			1.68			3.00		
0	1961.57	3289.20	1.68	3290.88	207.0	8.19	1.04	3291.92	.00	1.94		6.00	10.00	3.00	0	.00
0	27.20	.02083					.01977	.54			1.68			3.00		
0	1988.77	3289.77	1.73	3291.50	207.0	7.88	.96	3292.46	.00	1.94		6.00	10.00	3.00	0	.00
0	7.59	.02083					.01750	.13			1.68			3.00		
0	1996.36	3289.92	1.79	3291.72	207.0	7.51	.88	3292.59	.00	1.94		6.00	10.00	3.00	0	.00
0	2.80	.02083					.01531	.04			1.68			3.00		
0	1999.15	3289.98	1.86	3291.84	207.0	7.16	.80	3292.64	.00	1.94		6.00	10.00	3.00	0	.00
0	.85	.02083					.01340	.01			1.68			3.00		
0	2000.00	3290.00	1.92	3291.92	207.0	6.83	.72	3292.65	.00	1.94		6.00	10.00	3.00	0	.00
0	.00	.02083					.01250	.00			1.68			3.00		
0	2000.00	3290.00	1.92	3291.92	207.0	6.83	.72	3292.65	.00	1.94		6.00	10.00	3.00	0	.00
0	740.37	.01250					.01250	9.26			1.92			3.00		
0	2740.37	3299.26	1.92	3301.18	207.0	6.83	.72	3301.90	.00	1.94		6.00	10.00	3.00	0	.00
0	4.85	.01250					.01296	.06			1.92			3.00		
0	2745.22	3299.32	1.89	3301.20	207.0	7.00	.76	3301.97	.00	1.94		6.00	10.00	3.00	0	.00
0	5.89	.01250					.01438	.08			1.92			3.00		
0	2751.11	3299.39	1.82	3301.21	207.0	7.34	.84	3302.05	.00	1.94		6.00	10.00	3.00	0	.00
0	5.22	.01250					.01643	.09			1.92			3.00		
0	2756.33	3299.45	1.76	3301.21	207.0	7.70	.92	3302.14	.00	1.94		6.00	10.00	3.00	0	.00
0	4.89	.01250					.01879	.09			1.92			3.00		
0	2761.23	3299.52	1.70	3301.21	207.0	8.08	1.01	3302.23	.00	1.94		6.00	10.00	3.00	0	.00
0	4.65	.01250					.02149	.10			1.92			3.00		
0	2765.87	3299.57	1.64	3301.21	207.0	8.47	1.12	3302.33	.00	1.94		6.00	10.00	3.00	0	.00
0	4.44	.01250					.02458	.11			1.92			3.00		

WATER SURFACE PROFILE LISTING

KINGMAN MASTER DRAINAGE PLAN

LINE Bb (DOWNTOWN)

Q2

O	STATION	INVERT ELEV	DEPTH OF FLOW	W.S. ELEV	Q	VEL	VEL HEAD	ENERGY GRD.EL.	SUPER ELEV	CRITICAL DEPTH		HGT/ DIA	BASE/ ID NO.	ZL	NO PIER	AVBPR
O	L/ELEM	SO					SF AVE	HF			NORM DEPTH			ZR		
0	2770.32	3299.63	1.58	3301.21	207.0	8.88	1.23	3302.44	.00	1.94		6.00	10.00	3.00	0	.00
0	4.26	.01250					.02813	.12			1.92			3.00		
0	2774.57	3299.68	1.52	3301.21	207.0	9.32	1.35	3302.56	.00	1.94		6.00	10.00	3.00	0	.00
0	4.08	.01250					.03220	.13			1.92			3.00		
0	2778.66	3299.73	1.47	3301.20	207.0	9.77	1.48	3302.69	.00	1.94		6.00	10.00	3.00	0	.00
0	3.92	.01250					.03687	.14			1.92			3.00		
0	2782.58	3299.78	1.42	3301.20	207.0	10.25	1.63	3302.83	.00	1.94		6.00	10.00	3.00	0	.00
0	3.77	.01250					.04223	.16			1.92			3.00		
0	2786.35	3299.83	1.37	3301.20	207.0	10.75	1.80	3302.99	.00	1.94		6.00	10.00	3.00	0	.00
0	3.62	.01250					.04839	.18			1.92			3.00		
0	2789.97	3299.87	1.32	3301.19	207.0	11.27	1.98	3303.17	.00	1.94		6.00	10.00	3.00	0	.00
0	3.48	.01250					.05545	.19			1.92			3.00		
0	2793.45	3299.92	1.27	3301.19	207.0	11.82	2.17	3303.36	.00	1.94		6.00	10.00	3.00	0	.00
0	3.34	.01250					.06358	.21			1.92			3.00		
0	2796.79	3299.96	1.22	3301.18	207.0	12.40	2.39	3303.57	.00	1.94		6.00	10.00	3.00	0	.00
0	3.21	.01250					.07291	.23			1.92			3.00		
0	2800.00	3300.00	1.18	3301.18	207.0	13.01	2.63	3303.81	.00	1.94		6.00	10.00	3.00	0	.00
O	JUNCT STR	.00000					.01693	.00						3.00		
0	2800.00	3300.00	3.04	3303.04	127.0	14.31	3.18	3306.22	.00	3.29		3.50	.00	.00	0	.00
O	JUNCT STR	.00000					.01689	.00						.00		
0	2800.00	3300.00	3.04	3303.04	127.0	14.31	3.18	3306.22	.00	3.29		3.50	.00	.00	0	.00
0	1253.67	.01688					.01689	21.18			3.04			.00		
0	4053.67	3321.16	3.04	3324.20	127.0	14.31	3.18	3327.38	.00	3.29		3.50	.00	.00	0	.00
0	228.36	.01688					.01678	3.83			3.04			.00		
0	4282.03	3325.01	3.07	3328.08	127.0	14.19	3.13	3331.21	.00	3.29		3.50	.00	.00	0	.00
0	117.97	.01688					.01632	1.93			3.04			.00		
0	4400.00	3327.00	3.29	3330.29	127.0	13.52	2.84	3333.14	.00	3.29		3.50	.00	.00	0	.00
O	TRANS STR	.01001					.03668	.37						.00		
0	4410.00	3327.10	6.68	3333.78	127.0	.63	.01	3333.79	.00	1.47		6.00	10.00	3.00	0	.00
O	JUNCT STR	.00000					.00002	.00						3.00		
0	4410.00	3327.10	6.69	3333.79	100.0	.50	.00	3333.79	.00	1.28		6.00	10.00	3.00	0	.00
0	4410.00	3327.10	1.20	3328.30	100.0	6.11	.58	3328.88	.00	1.28		6.00	10.00	3.00	0	.00
0	580.82	.01678					.01681	9.76			1.20			3.00		
0	4990.82	3336.85	1.20	3338.05	100.0	6.11	.58	3338.63	.00	1.28		6.00	10.00	3.00	0	.00

WATER SURFACE PROFILE LISTING

KINGMAN MASTER DRAINAGE PLAN
LINE Bb (DOWNTOWN)
Q2

O	STATION	INVERT ELEV	DEPTH OF FLOW	W.S. ELEV	Q	VEL	VEL HEAD	ENERGY GRD.EL.	SUPER ELEV	CRITICAL DEPTH	NORM DEPTH	HGT/ DIA	BASE/ ID NO.	ZL	NO PIER	AVBPR
O	L/ELEM	SO					SF AVE	HF						ZR		
0	7.76	.01678					.01617	.13			1.20			3.00		
0	4998.58	3336.98	1.23	3338.20	100.0	5.95	.55	3338.75	.00	1.28		6.00	10.00	3.00	0	.00
0	1.42	.01678					.01453	.02			1.20			3.00		
0	5000.00	3337.00	1.28	3338.28	100.0	5.67	.50	3338.78	.00	1.28		6.00	10.00	3.00	0	.00
0	.00	.01678					.01861	.00			1.20			3.00		
0	5000.00	3337.00	2.15	3339.15	100.0	16.15	4.05	3343.20	.00	3.07		3.50	.00	.00	0	.00
0	148.95	.02333					.02465	3.67			2.16			.00		
0	5148.95	3340.48	2.09	3342.57	100.0	16.65	4.31	3346.88	.00	3.07		3.50	.00	.00	0	.00
0	88.77	.02333					.02727	2.42			2.16			.00		
0	5237.73	3342.55	2.01	3344.56	100.0	17.46	4.74	3349.30	.00	3.07		3.50	.00	.00	0	.00
0	52.73	.02333					.03086	1.63			2.16			.00		
0	5290.45	3343.78	1.94	3345.71	100.0	18.31	5.21	3350.92	.00	3.07		3.50	.00	.00	0	.00
0	38.56	.02333					.03495	1.35			2.16			.00		
0	5329.02	3344.68	1.86	3346.54	100.0	19.20	5.73	3352.27	.00	3.07		3.50	.00	.00	0	.00
0	30.93	.02333					.03964	1.23			2.16			.00		
0	5359.94	3345.40	1.79	3347.19	100.0	20.14	6.31	3353.50	.00	3.07		3.50	.00	.00	0	.00
0	26.07	.02333					.04499	1.17			2.16			.00		
0	5386.01	3346.01	1.73	3347.73	100.0	21.12	6.94	3354.67	.00	3.07		3.50	.00	.00	0	.00
0	22.71	.02333					.05110	1.16			2.16			.00		
0	5408.72	3346.54	1.67	3348.20	100.0	22.16	7.63	3355.83	.00	3.07		3.50	.00	.00	0	.00
0	20.21	.02333					.05806	1.17			2.16			.00		
0	5428.93	3347.01	1.60	3348.61	100.0	23.24	8.39	3357.00	.00	3.07		3.50	.00	.00	0	.00
0	18.32	.02333					.06603	1.21			2.16			.00		
0	5447.26	3347.44	1.55	3348.98	100.0	24.37	9.23	3358.21	.00	3.07		3.50	.00	.00	0	.00
0	16.76	.02333					.07514	1.26			2.16			.00		
0	5464.01	3347.83	1.49	3349.32	100.0	25.56	10.15	3359.47	.00	3.07		3.50	.00	.00	0	.00
0	15.47	.02333					.08555	1.32			2.16			.00		
0	5479.48	3348.19	1.44	3349.63	100.0	26.81	11.17	3360.80	.00	3.07		3.50	.00	.00	0	.00
0	14.40	.02333					.09745	1.40			2.16			.00		
0	5493.88	3348.52	1.39	3349.91	100.0	28.12	12.29	3362.20	.00	3.07		3.50	.00	.00	0	.00
0	13.45	.02333					.11104	1.49			2.16			.00		
0	5507.33	3348.84	1.34	3350.18	100.0	29.49	13.52	3363.69	.00	3.07		3.50	.00	.00	0	.00
0	12.65	.02333					.12658	1.60			2.16			.00		
0	5519.97	3349.13	1.29	3350.43	100.0	30.93	14.87	3365.29	.00	3.07		3.50	.00	.00	0	.00

WATER SURFACE PROFILE LISTING

KINGMAN MASTER DRAINAGE PLAN

LINE Bb (DOWNTOWN)

Q2

O STATION / O L/ELEM	INVERT ELEV / SO	DEPTH OF FLOW	W.S. ELEV	Q	VEL	VEL HEAD / SF AVE	ENERGY GRD.EL. / HF	SUPER ELEV	CRITICAL DEPTH	NORM DEPTH	HGT/ DIA	BASE/ ID NO.	ZL / ZR	NO PIER	AVBPR
0 11.91	.02333					.14435	1.72			2.16			.00		
0 5531.89	3349.41	1.25	3350.66	100.0	32.44	16.35	3367.01	.00	3.07		3.50	.00	.00	0	.00
0 11.27	.02333					.16464	1.86			2.16			.00		
0 5543.16	3349.67	1.21	3350.88	100.0	34.02	17.99	3368.87	.00	3.07		3.50	.00	.00	0	.00
0 10.68	.02333					.18789	2.01			2.16			.00		
0 5553.84	3349.92	1.17	3351.09	100.0	35.68	19.79	3370.88	.00	3.07		3.50	.00	.00	0	.00
0 10.15	.02333					.21445	2.18			2.16			.00		
0 5563.98	3350.16	1.13	3351.28	100.0	37.42	21.77	3373.05	.00	3.07		3.50	.00	.00	0	.00
0 9.66	.02333					.24483	2.36			2.16			.00		
0 5573.64	3350.39	1.09	3351.47	100.0	39.25	23.94	3375.42	.00	3.07		3.50	.00	.00	0	.00
0 9.20	.02333					.27958	2.57			2.16			.00		
0 5582.84	3350.60	1.05	3351.65	100.0	41.17	26.34	3377.99	.00	3.07		3.50	.00	.00	0	.00
0 8.78	.02333					.31937	2.80			2.16			.00		
0 5591.62	3350.80	1.02	3351.82	100.0	43.17	28.97	3380.79	.00	3.07		3.50	.00	.00	0	.00
0 8.38	.02333					.36493	3.06			2.16			.00		
0 5600.00	3351.00	.98	3351.98	100.0	45.28	31.87	3383.85	.00	3.07		3.50	.00	.00	0	.00
0 .00	.02333					.21211	.00			2.16			.00		
0 5600.00	3351.00	.98	3351.98	100.0	7.88	.96	3352.95	.00	1.28		6.00	10.00	3.00	0	.00
0 364.61	.03500					.03500	12.76			.98			3.00		
0 5964.61	3363.76	.98	3364.74	100.0	7.88	.96	3365.71	.00	1.28		6.00	10.00	3.00	0	.00
0 21.65	.03500					.03316	.72			.98			3.00		
0 5986.26	3364.52	1.01	3365.53	100.0	7.58	.89	3366.42	.00	1.28		6.00	10.00	3.00	0	.00
0 7.26	.03500					.02929	.21			.98			3.00		
0 5993.52	3364.77	1.05	3365.82	100.0	7.23	.81	3366.64	.00	1.28		6.00	10.00	3.00	0	.00
0 3.45	.03500					.02551	.09			.98			3.00		
0 5996.97	3364.89	1.09	3365.99	100.0	6.89	.74	3366.73	.00	1.28		6.00	10.00	3.00	0	.00
0 1.93	.03500					.02222	.04			.98			3.00		
0 5998.90	3364.96	1.14	3366.10	100.0	6.57	.67	3366.77	.00	1.28		6.00	10.00	3.00	0	.00
0 1.10	.03500					.01936	.02			.98			3.00		
0 6000.00	3365.00	1.18	3366.18	100.0	6.27	.61	3366.79	.00	1.28		6.00	10.00	3.00	0	.00
0 976.24	.01800					.01803	17.60			1.18			3.00		
0 6976.24	3382.57	1.18	3383.75	100.0	6.27	.61	3384.36	.00	1.28		6.00	10.00	3.00	0	.00
0 15.53	.01800					.01793	.28			1.18			3.00		
0 6991.77	3382.85	1.18	3384.03	100.0	6.24	.61	3384.64	.00	1.28		6.00	10.00	3.00	0	.00

WATER SURFACE PROFILE LISTING

KINGMAN MASTER DRAINAGE PLAN

LINE Bb (DOWNTOWN)

Q2

O STATION / O L/ELEM	INVERT ELEV / SO	DEPTH OF FLOW	W.S. ELEV	Q	VEL	VEL HEAD / SF AVE	ENERGY GRD.EL. / HF	SUPER ELEV	CRITICAL DEPTH	NORM DEPTH	HGT/ DIA	BASE/ ID NO.	ZL / ZR	NO PIER	AVBPR
0 7.31	.01800					.01668	.12			1.18			3.00		
0 6999.08	3382.98	1.23	3384.21	100.0	5.95	.55	3384.76	.00	1.28		6.00	10.00	3.00	0	.00
0 .92	.01800					.01453	.01			1.18			3.00		
0 7000.00	3383.00	1.28	3384.28	100.0	5.67	.50	3384.78	.00	1.28		6.00	10.00	3.00	0	.00
OJUNCT STR	.00000					.00873	.00						3.00		
0 7000.00	3383.00	1.65	3384.65	87.0	3.53	.19	3384.84	.00	1.17		6.00	10.00	3.00	0	.00
0 2.17	.02211					.00423	.01			1.03			3.00		
0 7002.17	3383.05	1.59	3384.64	87.0	3.70	.21	3384.85	.00	1.17		6.00	10.00	3.00	0	.00
0 2.04	.02211					.00485	.01			1.03			3.00		
0 7004.21	3383.09	1.53	3384.63	87.0	3.88	.23	3384.86	.00	1.17		6.00	10.00	3.00	0	.00
0 1.89	.02211					.00555	.01			1.03			3.00		
0 7006.10	3383.13	1.48	3384.61	87.0	4.07	.26	3384.87	.00	1.17		6.00	10.00	3.00	0	.00
0 1.74	.02211					.00635	.01			1.03			3.00		
0 7007.84	3383.17	1.43	3384.60	87.0	4.27	.28	3384.88	.00	1.17		6.00	10.00	3.00	0	.00
0 1.56	.02211					.00727	.01			1.03			3.00		
0 7009.40	3383.21	1.38	3384.58	87.0	4.48	.31	3384.89	.00	1.17		6.00	10.00	3.00	0	.00
0 1.26	.02211					.00833	.01			1.03			3.00		
0 7010.66	3383.24	1.33	3384.56	87.0	4.70	.34	3384.90	.00	1.17		6.00	10.00	3.00	0	.00
OHYDRAULIC JUMP													3.00		
0 7010.66	3383.24	1.03	3384.27	87.0	6.44	.65	3384.91	.00	1.17		6.00	10.00	3.00	0	.00
0 915.81	.02211					.02216	20.30			1.03			3.00		
0 7926.47	3403.48	1.03	3404.51	87.0	6.44	.65	3405.16	.00	1.17		6.00	10.00	3.00	0	.00
0 15.08	.02211					.02156	.33			1.03			3.00		
0 7941.55	3403.81	1.05	3404.86	87.0	6.32	.62	3405.48	.00	1.17		6.00	10.00	3.00	0	.00
0 6.23	.02211					.01961	.12			1.03			3.00		
0 7947.78	3403.95	1.09	3405.04	87.0	6.03	.56	3405.60	.00	1.17		6.00	10.00	3.00	0	.00
0 1.80	.02211					.01708	.03			1.03			3.00		
0 7949.58	3403.99	1.13	3405.12	87.0	5.75	.51	3405.63	.00	1.17		6.00	10.00	3.00	0	.00
0 .42	.02211					.01486	.01			1.03			3.00		
0 7950.00	3404.00	1.17	3405.18	87.0	5.47	.47	3405.64	.00	1.17		6.00	10.00	3.00	0	.00
1															

APPENDIX C HYDRAULIC DETAILS

10 YEAR STORM

Major Drain Schematic C 0

Input Listing For Storm Plus C 1

BASIN A

Water Surface Profile Listing - Mohave Channel C12
Water Surface Profile Listing - Line-Ad C19
Water Surface Profile Listing - LineAd46 C24
Water Surface Profile Listing - Line-Ae C25
Water Surface Profile Listing - Line-Af C27
Water Surface Profile Listing - Line-Ag C32
Water Surface Profile Listing - Line-Ah C36
Water Surface Profile Listing - Line-Ai C39
Water Surface Profile Listing - Line-Aj C42
Water Surface Profile Listing - Line-Ak C45
Water Surface Profile Listing - Line-Am C47
Water Surface Profile Listing - Line-An C49
Water Surface Profile Listing - Line-Ao C53
Water Surface Profile Listing - Line-Ap C57

BASIN C

Water Surface Profile Listing - Railway Channel C59
Water Surface Profile Listing - Line-Cb C65
Water Surface Profile Listing - Line-Cc C67
Water Surface Profile Listing - Line-Cd C69
Water Surface Profile Listing - Line-Ce C73
Water Surface Profile Listing - Line-Cf C76
Water Surface Profile Listing - Line-Cg C78

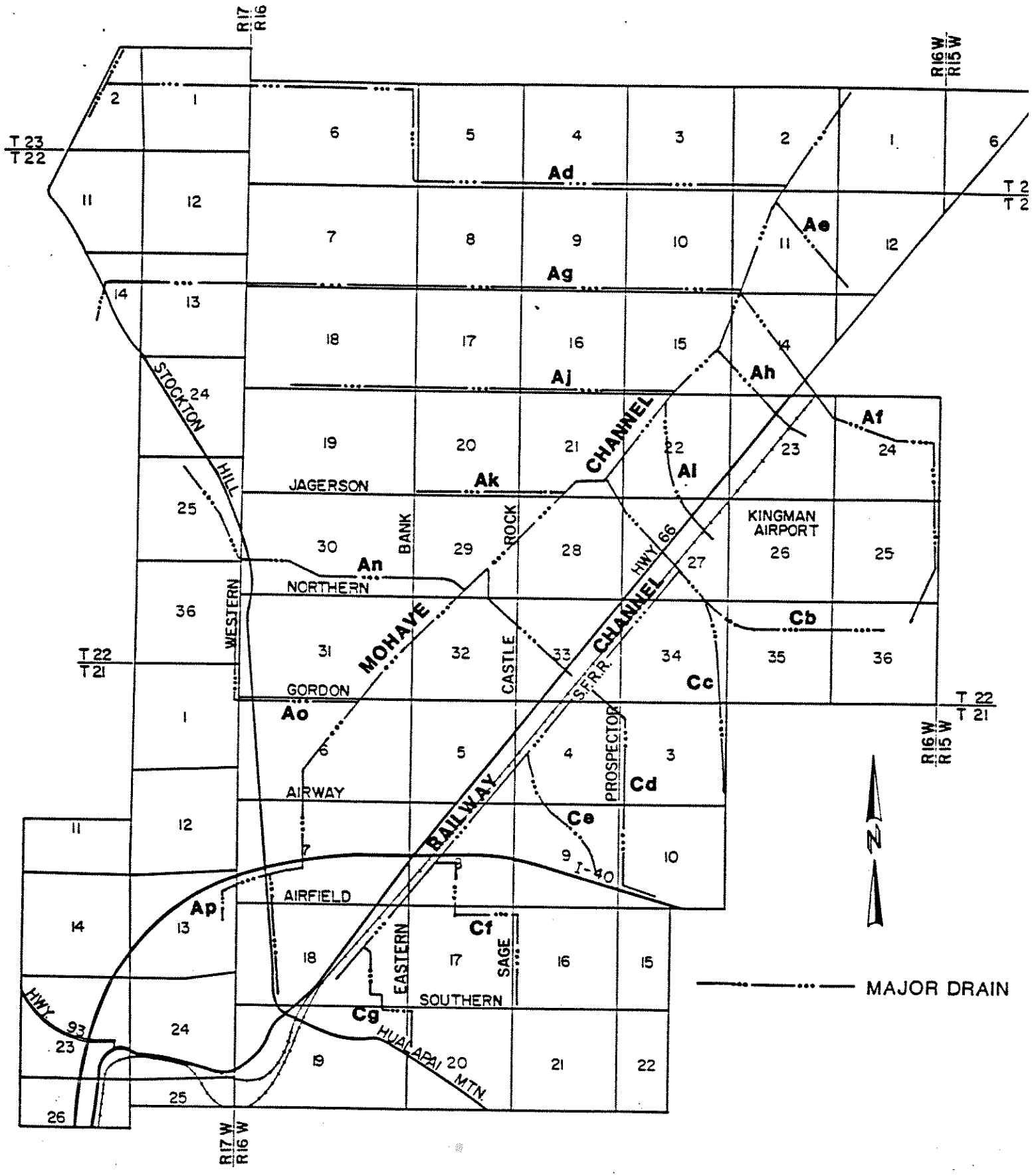

Major Drain Schematic

Input Listing for Storm Plus

```
JD  0  0  1
T1 KINGMAN MASTER DRAINAGE PLAN
T2 MOHAVE1   STA 0 - 31,800
T3 Q10
SO    000.  3178.   11                                  3183.57
R    6280.  3205.0  11       .030
JX   6300.  3207.0  11  9    .100   1078.               3207.5          45.
R    6320.  3207.2  11       .030
R   12580.  3232.5  10       .030
JX  12600.  3234.5  10  1    .100   4299.               3235.           45.
R   12620.  3234.7  10       .030
R   18520.  3260.2   9       .030
R   24080.  3279.5   9       .030
JX  24100.  3281.5   9  2    .100   2840.               3282.           45.
R   24120.  3281.7   9       .030
R   31480.  3305.5   1       .030
JX  31500.  3307.5   1  2    .100   1423.               3308.           45.
R   31800.  3308.3   1       .030
SH                   1                                  3314.3
CD   1  1              9.     200.  3.   3.
CD   2  1              7.     200.  3.   3.
CD   4  1              5.      10.  3.   3.
CD   9  1             10.     400.  3.   3.
CD  10  1             10.     600.  3.   3.
CD  11  1             10.     700.  3.   3.

Q          3361.


JD  0  0  1
T1 KINGMAN MASTER DRAINAGE PLAN
T2 MOHAVE2   STA 31,800 - 50,400
T3 Q10
SO  31800.  3308.3   1                                  3314.2
R   33280.  3313.2   1       .030
JX  33300.  3315.2   1  3    .100   404.                3315.7          45.
R   33320.  3315.4   1       .030
R   42480.  3358.4   2       .030
JX  42500.  3360.4   2  3    .100  1902.                3361.           45.
R   42520.  3360.9   2       .030
R   50400.  3405.6   3       .030
SH                   3                                  3411.6
CD   1  1              8.     150.  3.   3.
CD   2  1              7.     120.  3.   3.
CD   3  1              6.      50.  3.   3.

Q          1054.
```

Input Listing for Storm Plus

```
JD  0  0  1
T1 KINGMAN MASTER DRAINAGE PLAN
T2 LINE Ad
T3 Q10
SO       .00 3208.0  1                                3212.0
R    2170.00 3236.9  1       .03
R    3922.00 3262.5  1       .03
R    6112.00 3294.4  1       .03
R    8083.00 3323.2  1       .03
R   10054.00 3351.9  1       .03
R   12025.00 3380.7  1       .03
R   14215.00 3412.6  1       .03
R   16186.00 3441.4  1       .03
R   18380.00 3472.3  1       .03
JX  18400.00 3475.3  1  2    .10    85.0          3472.5          90.0
R   23580.00 3516.0  1       .03
JX  23600.00 3519.1  1  2    .1     89.0          3516.2          90.0
R   24800.0  3534.6  1       .03
R   26800.0  3571.9  1       .03
R   27800.0  3590.6  1       .03
R   28800.0  3609.3  1       .03
R   29800.0  3627.9  1       .03
R   30800.0  3646.6  1       .03
R   31300.0  3656.9  1       .03
R   33300.0  3710.4  1       .03
R   35300.0  3763.8  1       .03
R   37300.0  3817.2  1       .03
R   39300.0  3870.6  1       .03
R   39580.0  3876.0  1       .03
JX  39600.0  3880.1  1  3    .10  1249.0           3880.0          90.0
R   41600.0  3902.0  3       .03
SH                   1                            3905.
CD  1   1             7.      150.  3.   3.
CD  2   1             5.       20.  3.   3.
CD  3   1             7.       80.  3.   3.

Q         1638.


JD  0  0  1
T1 KINGMAN MASTER DRAINAGE PLAN
T2 LINE Ad46
T3 Q10
SO 00000.00 3880.00  1                                3883.
R  02000.00 3968.00  1       .03
SH                   1                            3971.
CD   1  1             7.     30.   2.   2.

Q          537.
```

Input Listing for Storm Plus

```
JD  0  0  1
T1 KINGMAN MASTER DRAINAGE PLAN
T2 LINE Ae
T3 Q10
SO      0.00 3215.0  1                              3218.
R    2000.00 3226.0  1       .03
R    3240.00 3235.3  1       .03
R    3870.00 3241.0  1       .03
R    4500.00 3246.6  1       .03
R    5646.00 3264.8  1       .03
R    6028.00 3270.8  1       .03
R    6400.00 3276.9  1       .03
SH                   1                              3280.
CD   1  1             7.     200.  3.   3.

Q          2522.


JD  0  0  1
T1 KINGMAN MASTER DRAINAGE PLAN
T2 LINE Af
T3 Q10
SO       .00 3235.0  1       .03                    3239.
R     884.00 3238.5  1       .03
R    1788.00 3244.1  1       .03
R    2692.00 3249.6  1       .03
R    4972.00 3266.4  1       .03
R    5916.00 3277.9  1       .03
R    6800.00 3291.3  1       .03
R    8040.00 3303.7  1       .03
R    8984.00 3315.1  1       .03
R   10164.00 3329.4  1       .03
R   11108.00 3340.9  1       .03
R   12052.00 3352.3  1       .03
R   12996.00 3363.8  1       .03
R   14176.00 3378.1  1       .03
R   15120.00 3389.6  1       .03
R   16064.00 3401.0  1       .03
R   17008.00 3412.5  1       .03
R   17580.00 3418.2  1       .03
JX  17600.00 3420.2  1  2    .10  5303.             3419.          45.
R   17716.00 3421.1  2       .03
R   18188.00 3426.8  2       .03
R   18424.00 3429.7  2       .03
R   18660.00 3432.5  2       .03
R   19132.00 3438.3  2       .03
R   20076.00 3449.7  2       .03
R   21020.00 3461.2  2       .03
R   21964.00 3472.6  2       .03
R   22400.00 3475.5  2       .03
SH                   2                              3480.
CD   1  1             8.     250.  3.   3.
CD   2  1             5.     20.   3.   3.

Q          226.
```

Input Listing for Storm Plus

```
JD  0  0  1
T1 KINGMAN MASTER DRAINAGE PLAN
T2 LINE Ag
T3 Q10
SO       0.0 3242.0  1                              3247.0
R    28490.0 3676.8  1       .03
JX   28495.0 3676.9  1  3    .10   172.0            3678.0          45.0
R    28500.0 3677.0  1       .03
R    31000.0 3770.0  2       .03
JX   33100.0 3778.1  2  3    .03   990.0            3779.0          45.0
R    33200.0 3778.5  2       .10                         100.
R    34900.0 3786.1  2       .03
SH                   2                              3789.0
CD   1  1               8.0    100.  3.   3.
CD   2  1               8.0     80.  3.   3.
CD   3  1               5.0     20.  3.   3.

Q          1039.


JD  0  0  1
T1 KINGMAN MASTER DRAINAGE PLAN
T2 LINE Ah
T3 Q10
SO      0.00 3242.0  1                              3245.
R    3000.00 3262.0  1       .03
R    3653.00 3265.9  1       .03
R    4326.00 3271.8  1       .03
R    4999.00 3277.8  1       .03
R    5316.00 3281.6  1       .03
R    5633.00 3285.4  1       .03
R    5950.00 3289.1  1       .03
R    6267.00 3292.9  1       .03
R    6584.00 3296.7  1       .03
R    6901.00 3300.5  1       .03
R    7200.00 3304.2  1       .03
SH                   1                              3307.
CD   1  1             5.     50.   3.   3.

Q          501.
```

Input Listing for Storm Plus

```
JD  0  0  1
T1 KINGMAN MASTER DRAINAGE PLAN
T2 LINE Ai
T3 Q10
SO      0.00 3258.0  1                          3262.
R    3500.00 3274.0  1       .03
R    4360.00 3279.2  1       .03
R    5240.00 3286.3  1       .03
R    6120.00 3293.5  1       .03
R    7000.00 3300.6  1       .03
R    7210.00 3303.7  1       .03
R    7420.00 3308.   1       .03
SH                   1                          3311.
CD   1  1             5.     20.   3.   3.

Q         278.


JD  0  0  1
T1 KINGMAN MASTER DRAINAGE PLAN
T2 LINE Aj
T3 Q10
SO 0000.00  3260.00  1                          3264.
R     389.00 3263.1  1       .03
R   10159.00 3385.4  1       .03
R   12337.00 3413.9  1       .03
R   14152.00 3437.6  1       .03
R   16330.00 3466.1  1       .03
R   18145.00 3489.8  1       .03
R   19600.00 3508.8  1       .03
SH                   1                          3512.3
CD   1  1             6.     20.   3.   3.

Q         134.


JD  0  0  1
T1 KINGMAN MASTER DRAINAGE PLAN
T2 LINE Ak
T3 Q10
SO     00.00 3292.0  1       .03                 3295.
R    7200.00 3356.0  1       .03
SH                   2                          3359.0
CD   1  1             6.     20.   3.   3.
CD   2  1             5.     20.   3.   3.

Q         167.
```

Input Listing for Storm Plus

```
JD  0  0  1
T1 KINGMAN MASTER DRAINAGE PLAN
T2 LINE Am
T3 Q10
SO      0.00 3310.5  1                              3313.
R     500.00 3311.8  1       .03
R    2652.00 3323.8  1       .03
R    4324.00 3337.6  1       .03
R    5160.00 3344.5  1       .03
R    5996.00 3351.4  1       .03
R    7196.00 3368.0  1       .03
R    7436.00 3371.3  1       .03
R    7900.00 3377.9  1       .03
SH                   1                              3381.
CD   1  1             5.     20.   3.   3.

Q         187.


JD  0  0  1
T1 KINGMAN MASTER DRAINAGE PLAN
T2 LINE An
T3 Q10
SO      0.00 3316.7  1                              3321.3
R    5114.00 3345.9  1       .03
R    6116.00 3357.5  1       .03
R    8470.00 3386.5  1       .03
JX   8471.00 3386.7  1  2    .10   443.             3387.          45.
R   10124.00 3404.1  1       .03
R   12128.00 3427.4  1       .03
R   14000.00 3452.4  1       .03
R   15000.00 3471.3  1       .03
R   16000.00 3490.2  1       .03
R   17000.00 3509.1  1       .03
SH                   1                              3515.
CD   1  1             7.     60.   3.   3.
CD   2  1             7.     40.   3.   3.

Q          840.
```

Input Listing for Storm Plus

```
JD  0  0  1
T1 KINGMAN MASTER DRAINAGE PLAN
T2 Line Ao       Bull Mountain
T3 Q10
SO    000.   3350.    1                                3354.
R    5680.   3426.    1       .030
TS   5700.   3426.5   7       .015
WX                    2
R    5780.   3428.    2       .014
WE                    7
R    6400.   3440.    3       .015
R    7200.   3451.    4       .020
JX   7210.   3451.5   5  6    .100   498.             3452.          45.
R    10000.  3511.    5       .020
SH                    5                                3514.
CD   1  1              10.     70.    3.    3.
CD   2  3    6  1.0    5.      76.
CD   3  1              10.     28.    2.    2.
CD   4  1              10.     40.    2.    2.
CD   5  1              8.      30.    2.    2.
CD   6  1              5.      20.    2.    2.
CD   7  1              10.     76.    2.    2.
CD   8  1              4.      10.    2.    2.

Q          1040.


JD  0  0  1
T1 KINGMAN MASTER DRAINAGE PLAN
T2 LINE Ap    (GOLF COURSE)
T3 Q10
SO    000.    3420.0  1                                3424.
R    3500.0   3460.0  1       .03
SH                    1                                3464.
CD   1  1              6.      10.    3.    3.

Q          189.
```

Input Listing for Storm Plus

```
JD  0  0  1
T1 KINGMAN MASTER DRAINAGE PLAN
T2 RAILWAY   50 - 150
T3 Q10
SO    000.  3282.    1                                  3288.0
R    6180.  3339.0   1       .030
JX   6200.  3341.0   1  2    .100   1070.               3341.5          45.
R    6220.  3341.5   1       .030
R   13180.  3375.0   2       .030
JX  13200.  3377.0   2  3    .100   1542.               3377.5          45.
R   13220.  3377.5   2       .030
R   17780.  3409.0   3       .030
JX  17800.  3411.0   3  3    .100    502.               3411.5          45.
R   17820.  3411.5   3       .030
R   24980.  3460.0   4       .030
JX  25000.  3462.0   4  3    .100    584.               3462.5          45.
R   25020.  3462.5   4       .030
R   29980.  3489.0   5       .030
JX  30000.  3491.0   5  3    .100    408.               3491.5          45.
R   30020.  3491.5   5       .030
R   33300.  3498.4   6       .030
SH                    6                                  3503.
CD   1  1             10.     130.  3.   3.
CD   2  1             10.     100.  3.   3.
CD   3  1             10.      50.  3.   3.
CD   4  1              8.      40.  3.   3.
CD   5  1              8.      20.  3.   3.
CD   6  1              7.      10.  3.   3.

Q           120.


JD  0  0  1
T1 KINGMAN MASTER DRAINAGE PLAN
T2 LINE Cb
T3 Q10
SO     00.00 3381.0  1       .03                        3385.
R    8800.00 3470.0  1       .03
SH                    1                                  3474.0
CD   1  1              6.      40.  3.   3.

Q          598.
```

Input Listing for Storm Plus

```
JD  0  0  1
T1 KINGMAN MASTER DRAINAGE PLAN
T2 LINE Cc
T3 Q10
SO     00.00 3341.0  1       .03                    3345.
R    3190.00 3381.0  1       .03
JX   3200.00 3381.2  1  2    .10  679.              3384.3        45.
TS   3210.   3384.5  1       .10
R    3230.   3384.7  2       .03
R   11200.00 3510.0  2       .03
SH                   2                             3513.0
CD   1  1             8.     60.   3.   3.
CD   2  1             6.     40.   3.   3.

Q         884.


JD  0  0  1
T1 KINGMAN MASTER DRAINAGE PLAN
T2 LINE Cd
T3 Q10
SO     00.00 3382.0  1                             3385.5
R     240.00 3385.3  1       .03
R    1032.00 3400.1  1       .03
R    2136.00 3414.2  1       .03
R    3240.00 3428.4  1       .03
R    4068.00 3439.0  1       .03
R    5172.00 3453.1  1       .03
R    6000.00 3463.7  1       .03
R    7037.00 3483.2  1       .03
R    8094.00 3502.7  1       .03
R    9000.00 3519.4  1       .03
R   10000.00 3544.2  1       .03
R   11000.0  3568.0  1       .03
R   11600.00 3576.0  1       .03
R   14400.00 3578.0  1       .03
SH                   1                             3581.
CD   1  1             7.     60.   3.   3.

Q         1639.
```

Input Listing for Storm Plus

```
JD  0  0  1
T1 KINGMAN MASTER DRAINAGE PLAN
T2 LINE Ce
T3 Q10
SO       .00 3415.0  1       .03                  3418.
R     284.00 3416.7  1       .03
R     588.00 3420.4  1       .03
R    1196.00 3427.8  1       .03
R    2092.00 3442.6  1       .03
R    3128.00 3461.9  1       .03
R    4016.00 3478.6  1       .03
R    5052.00 3497.9  1       .03
R    6041.00 3518.9  1       .03
R    7037.00 3547.5  1       .03
R    7200.00 3552.2  1       .03
SH                   1                            3558.
CD   1  1             6.     40.   3.   3.

Q          556.


JD  0  0  1
T1 KINGMAN MASTER DRAINAGE PLAN
T2 LINE Cf
T3 Q10
SO       0.00 3472.0  1                           3475.5
R       50.00 3472.5  1       .03
R     1190.00 3478.5  1       .03
TS    1210.00 3481.5  1       .10
R     1220.0  3481.7  1       .03
R     3590.0  3523.0  1       .03
TS    3610.0  3526.0  1       .10
R     3620.0  3526.1  1       .03
R     6390.0  3561.0  1       .03
TS    6410.0  3564.0  1       .10
R     6420.0  3564.1  1       .03
R    10400.0  3635.0  1       .03
SH                   1                            3639.
CD   1  1             6.     40.   3.   3.

Q          609.
```

Input Listing for Storm Plus

```
JD  0  0  1
T1 KINGMAN MASTER DRAINAGE PLAN
T2 LINE Cg
T3 Q10
SO   0000.00 3510.0  1       .03                  3513.
R    1095.00 3520.0  1       .03
TS   1100.00 3522.0  1       .10
R    4495.0  3550.0  1       .03
TS   4500.0  3552.0  1       .10
R    5595.00 3560.0  1       .03
TS   5600.0  3562.0  1       .10
R    6395.00 3580.0  1       .03
R    7700.00 3620.0  1       .03
TS   7705.0  3622.0  1       .10
R    10400.0 3660.0  1       .03
SH                   1                          3683.5
CD   1  1             6.     40.   3.   3.

Q         528.
```

WATER SURFACE PROFILE LISTING

KINGMAN MASTER DRAINAGE PLAN

MOHAVE1 STA 0 - 31,800

Q10

0 STATION / 0 L/ELEM	INVERT ELEV / SO	DEPTH OF FLOW	W.S. ELEV	Q	VEL	VEL HEAD / SF AVE	ENERGY GRD.EL. / HF	SUPER ELEV	CRITICAL DEPTH / NORM DEPTH	HGT/ DIA	BASE/ ID NO.	ZL / ZR	NO PIER	AVBPR
0 .00	3178.00	5.57	3183.57	13001.0	3.26	.16	3183.73	.00	2.20	10.00	700.00	3.00	0	.00
0 62.26	.00430					.00049	.03		2.84			3.00		
0 62.26	3178.27	5.32	3183.58	13001.0	3.42	.18	3183.77	.00	2.20	10.00	700.00	3.00	0	.00
0 60.17	.00430					.00057	.03		2.84			3.00		
0 122.43	3178.53	5.07	3183.60	13001.0	3.58	.20	3183.80	.00	2.20	10.00	700.00	3.00	0	.00
0 58.30	.00430					.00067	.04		2.84			3.00		
0 180.73	3178.78	4.84	3183.62	13001.0	3.76	.22	3183.84	.00	2.20	10.00	700.00	3.00	0	.00
0 56.66	.00430					.00078	.04		2.84			3.00		
0 237.39	3179.02	4.62	3183.64	13001.0	3.94	.24	3183.88	.00	2.20	10.00	700.00	3.00	0	.00
0 55.31	.00430					.00092	.05		2.84			3.00		
0 292.70	3179.26	4.41	3183.67	13001.0	4.13	.27	3183.93	.00	2.20	10.00	700.00	3.00	0	.00
0 54.28	.00430					.00107	.06		2.84			3.00		
0 346.99	3179.49	4.21	3183.70	13001.0	4.33	.29	3183.99	.00	2.20	10.00	700.00	3.00	0	.00
0 53.67	.00430					.00125	.07		2.84			3.00		
0 400.66	3179.72	4.02	3183.74	13001.0	4.55	.32	3184.06	.00	2.20	10.00	700.00	3.00	0	.00
0 53.61	.00430					.00147	.08		2.84			3.00		
0 454.28	3179.95	3.83	3183.79	13001.0	4.77	.35	3184.14	.00	2.20	10.00	700.00	3.00	0	.00
0 54.33	.00430					.00172	.09		2.84			3.00		
0 508.60	3180.19	3.66	3183.84	13001.0	5.00	.39	3184.23	.00	2.20	10.00	700.00	3.00	0	.00
0 56.23	.00430					.00201	.11		2.84			3.00		
0 564.83	3180.43	3.49	3183.92	13001.0	5.24	.43	3184.34	.00	2.20	10.00	700.00	3.00	0	.00
0 60.19	.00430					.00235	.14		2.84			3.00		
0 625.02	3180.69	3.33	3184.02	13001.0	5.50	.47	3184.49	.00	2.20	10.00	700.00	3.00	0	.00
0 68.25	.00430					.00275	.19		2.84			3.00		
0 693.27	3180.98	3.18	3184.16	13001.0	5.77	.52	3184.67	.00	2.20	10.00	700.00	3.00	0	.00
0 86.97	.00430					.00322	.28		2.84			3.00		
0 780.24	3181.35	3.03	3184.38	13001.0	6.05	.57	3184.95	.00	2.20	10.00	700.00	3.00	0	.00
0 153.82	.00430					.00376	.58		2.84			3.00		
0 934.06	3182.02	2.89	3184.91	13001.0	6.35	.63	3185.53	.00	2.20	10.00	700.00	3.00	0	.00
0 229.19	.00430					.00418	.96		2.84			3.00		
0 1163.25	3183.00	2.84	3185.84	13001.0	6.46	.65	3186.49	.00	2.20	10.00	700.00	3.00	0	.00
0 5116.75	.00430					.00430	22.01		2.84			3.00		
0 6280.00	3205.00	2.84	3207.84	13001.0	6.46	.65	3208.49	.00	2.20	10.00	700.00	3.00	0	.00
0JUNCT STR	.10000					.07565	1.51					3.00		

WATER SURFACE PROFILE LISTING

KINGMAN MASTER DRAINAGE PLAN
MOHAVE1 STA 0 - 31,800
Q10

O	STATION	INVERT ELEV	DEPTH OF FLOW	W.S. ELEV	Q	VEL	VEL HEAD	ENERGY GRD.EL.	SUPER ELEV	CRITICAL DEPTH		HGT/ DIA	BASE/ ID NO.	ZL	NO PIER	AVBPR
O	L/ELEM	SO					SF AVE	HF			NORM DEPTH			ZR		
0	6300.00	3207.00	2.14	3209.14	11923.0	7.89	.97	3210.11	.00	2.08		10.00	700.00	3.00	0	.00
0	7.79	.01000					.00966	.08			2.10			3.00		
0	6307.79	3207.08	2.10	3209.17	11923.0	8.06	1.01	3210.18	.00	2.08		10.00	700.00	3.00	0	.00
0	12.21	.01000					.01000	.12			2.10			3.00		
0	6320.00	3207.20	2.10	3209.29	11923.0	8.06	1.01	3210.30	.00	2.08		10.00	700.00	3.00	0	.00
0	6320.00	3207.20	2.30	3209.50	11923.0	8.55	1.14	3210.63	.00	2.30		10.00	600.00	3.00	0	.00
0	1.45	.00404					.00926	.01			3.01			3.00		
0	6321.45	3207.21	2.41	3209.61	11923.0	8.15	1.03	3210.65	.00	2.30		10.00	600.00	3.00	0	.00
0	5.75	.00404					.00791	.05			3.01			3.00		
0	6327.20	3207.23	2.52	3209.75	11923.0	7.77	.94	3210.69	.00	2.30		10.00	600.00	3.00	0	.00
0	13.35	.00404					.00676	.09			3.01			3.00		
0	6340.54	3207.28	2.65	3209.93	11923.0	7.41	.85	3210.78	.00	2.30		10.00	600.00	3.00	0	.00
0	28.70	.00404					.00578	.17			3.01			3.00		
0	6369.25	3207.40	2.77	3210.17	11923.0	7.07	.78	3210.95	.00	2.30		10.00	600.00	3.00	0	.00
0	70.20	.00404					.00494	.35			3.01			3.00		
0	6439.45	3207.68	2.91	3210.59	11923.0	6.74	.71	3211.30	.00	2.30		10.00	600.00	3.00	0	.00
0	217.21	.00404					.00430	.93			3.01			3.00		
0	6656.66	3208.56	3.01	3211.57	11923.0	6.50	.66	3212.23	.00	2.30		10.00	600.00	3.00	0	.00
0	5923.34	.00404					.00405	23.96			3.01			3.00		
0	12580.00	3232.50	3.01	3235.51	11923.0	6.50	.66	3236.17	.00	2.30		10.00	600.00	3.00	0	.00
O	JUNCT STR	.10000												3.00		
0	12600.00	3234.50	1.71	3236.21	7624.0	7.38	.85	3237.05	.00	1.71		10.00	600.00	3.00	0	.00
0	4.07	.01000					.01051	.04			1.76			3.00		
0	12604.07	3234.54	1.76	3236.30	7624.0	7.17	.80	3237.10	.00	1.71		10.00	600.00	3.00	0	.00
0	15.93	.01000					.01001	.16			1.76			3.00		
0	12620.00	3234.70	1.76	3236.46	7624.0	7.17	.80	3237.26	.00	1.71		10.00	600.00	3.00	0	.00
0	12620.00	3234.70	2.23	3236.93	7624.0	8.40	1.10	3238.03	.00	2.23		10.00	400.00	3.00	0	.00
0	1.44	.00432					.00938	.01			2.88			3.00		
0	12621.44	3234.71	2.34	3237.04	7624.0	8.01	1.00	3238.04	.00	2.23		10.00	400.00	3.00	0	.00
0	5.79	.00432					.00802	.05			2.88			3.00		
0	12627.23	3234.73	2.45	3237.18	7624.0	7.64	.91	3238.09	.00	2.23		10.00	400.00	3.00	0	.00
0	13.78	.00432					.00686	.09			2.88			3.00		
0	12641.00	3234.79	2.57	3237.36	7624.0	7.28	.82	3238.18	.00	2.23		10.00	400.00	3.00	0	.00
0	31.08	.00432					.00586	.18			2.88			3.00		

WATER SURFACE PROFILE LISTING

KINGMAN MASTER DRAINAGE PLAN
MOHAVE1 STA 0 - 31,800
Q10

O STATION / O L/ELEM	INVERT ELEV / SO	DEPTH OF FLOW	W.S. ELEV	Q	VEL	VEL HEAD / SF AVE	ENERGY GRD.EL. / HF	SUPER ELEV	CRITICAL DEPTH / NORM DEPTH	HGT/ DIA	BASE/ ID NO.	ZL / ZR	NO PIER	AVBPR
0 12672.08	3234.93	2.69	3237.62	7624.0	6.94	.75	3238.36	.00	2.23	10.00	400.00	3.00	0	.00
0 87.23	.00432					.00502	.44		2.88			3.00		
0 12759.32	3235.30	2.82	3238.12	7624.0	6.62	.68	3238.80	.00	2.23	10.00	400.00	3.00	0	.00
0 194.18	.00432					.00447	.87		2.88			3.00		
0 12953.50	3236.14	2.88	3239.02	7624.0	6.49	.65	3239.67	.00	2.23	10.00	400.00	3.00	0	.00
0 5566.50	.00432					.00433	24.08		2.88			3.00		
0 18520.00	3260.20	2.88	3263.08	7624.0	6.49	.65	3263.73	.00	2.23	10.00	400.00	3.00	0	.00
0 143.75	.00347					.00401	.58		3.07			3.00		
0 18663.75	3260.70	3.01	3263.71	7624.0	6.19	.59	3264.31	.00	2.23	10.00	400.00	3.00	0	.00
0 303.67	.00347					.00359	1.09		3.07			3.00		
0 18967.42	3261.75	3.07	3264.82	7624.0	6.07	.57	3265.40	.00	2.23	10.00	400.00	3.00	0	.00
0 5112.58	.00347					.00347	17.75		3.07			3.00		
0 24080.00	3279.50	3.07	3282.57	7624.0	6.07	.57	3283.14	.00	2.23	10.00	400.00	3.00	0	.00
0 .00	.00347					.02103	.00		3.07			3.00		
0 24080.00	3279.50	3.07	3282.57	7624.0	6.07	.57	3283.14	.00	2.23	10.00	400.00	3.00	0	.00
0JUNCT STR	.10000					.04691	.94					3.00		
0 24100.00	3281.50	2.09	3283.59	4784.0	5.64	.49	3284.08	.00	1.64	10.00	400.00	3.00	0	.00
0 10.05	.01000					.00539	.05		1.69			3.00		
0 24110.05	3281.60	1.99	3283.59	4784.0	5.92	.54	3284.14	.00	1.64	10.00	400.00	3.00	0	.00
0 9.95	.01000					.00630	.06		1.69			3.00		
0 24120.00	3281.70	1.90	3283.60	4784.0	6.20	.60	3284.20	.00	1.64	10.00	400.00	3.00	0	.00
0 24120.00	3281.70	2.58	3284.28	4784.0	8.94	1.24	3285.52	.00	2.58	9.00	200.00	3.00	0	.00
0 1.39	.00323					.00904	.01		3.58			3.00		
0 24121.39	3281.70	2.70	3284.40	4784.0	8.52	1.13	3285.53	.00	2.58	9.00	200.00	3.00	0	.00
0 5.28	.00323					.00775	.04		3.58			3.00		
0 24126.67	3281.72	2.82	3284.54	4784.0	8.13	1.03	3285.57	.00	2.58	9.00	200.00	3.00	0	.00
0 11.39	.00323					.00664	.08		3.58			3.00		
0 24138.06	3281.76	2.96	3284.71	4784.0	7.75	.93	3285.65	.00	2.58	9.00	200.00	3.00	0	.00
0 21.62	.00323					.00570	.12		3.58			3.00		
0 24159.68	3281.83	3.09	3284.92	4784.0	7.39	.85	3285.77	.00	2.58	9.00	200.00	3.00	0	.00
0 40.62	.00323					.00489	.20		3.58			3.00		
0 24200.30	3281.96	3.24	3285.20	4784.0	7.04	.77	3285.97	.00	2.58	9.00	200.00	3.00	0	.00
0 84.03	.00323					.00419	.35		3.58			3.00		
0 24284.33	3282.23	3.39	3285.62	4784.0	6.72	.70	3286.32	.00	2.58	9.00	200.00	3.00	0	.00

WATER SURFACE PROFILE LISTING

KINGMAN MASTER DRAINAGE PLAN
MOHAVE1 STA 0 - 31,800
Q10

0 STATION / 0 L/ELEM	INVERT ELEV / SO	DEPTH OF FLOW	W.S. ELEV	Q	VEL	VEL HEAD / SF AVE	ENERGY GRD.EL. / HF	SUPER ELEV	CRITICAL DEPTH / NORM DEPTH	HGT/ DIA	BASE/ ID NO.	ZL / ZR	NO PIER	AVBPR
0 257.04	.00323					.00360	.92		3.58			3.00		
0 24541.38	3283.06	3.55	3286.61	4784.0	6.40	.64	3287.25	.00	2.58		9.00	200.00	3.00	0 .00
0 395.97	.00323					.00328	1.30		3.58			3.00		
0 24937.35	3284.34	3.58	3287.92	4784.0	6.35	.63	3288.54	.00	2.58		9.00	200.00	3.00	0 .00
0 6542.65	.00323					.00323	21.16		3.58			3.00		
0 31480.00	3305.50	3.58	3309.07	4784.0	6.35	.63	3309.70	.00	2.58		9.00	200.00	3.00	0 .00
0JUNCT STR	.10000					.04139	.83					3.00		
0 31500.00	3307.50	2.68	3310.18	3361.0	6.03	.57	3310.74	.00	2.04		9.00	200.00	3.00	0 .00
0 59.51	.00267					.00391	.23		3.07			3.00		
0 31559.51	3307.66	2.80	3310.46	3361.0	5.75	.51	3310.98	.00	2.04		9.00	200.00	3.00	0 .00
0 122.71	.00267					.00336	.41		3.07			3.00		
0 31682.23	3307.99	2.94	3310.92	3361.0	5.48	.47	3311.39	.00	2.04		9.00	200.00	3.00	0 .00
0 117.77	.00267					.00300	.35		3.07			3.00		
0 31800.00	3308.30	2.99	3311.29	3361.0	5.37	.45	3311.74	.00	2.04		9.00	200.00	3.00	0 .00

1

WATER SURFACE PROFILE LISTING

KINGMAN MASTER DRAINAGE PLAN

MOHAVE2 STA 31,800 - 50,400

Q10

0 STATION / 0 L/ELEM	INVERT ELEV / SO	DEPTH OF FLOW	W.S. ELEV	Q	VEL	VEL HEAD / SF AVE	ENERGY GRD.EL. / HF	SUPER ELEV	CRITICAL DEPTH / NORM DEPTH	HGT/ DIA	BASE/ ID NO.	ZL / ZR	NO PIER	AVBPR
0 31800.00	3308.30	5.90	3314.20	3360.0	3.40	.18	3314.38	.00	2.46	8.00	150.00	3.00	0	.00
0 83.87	.00331					.00055	.05		3.40			3.00		
0 31883.87	3308.58	5.65	3314.23	3360.0	3.56	.20	3314.43	.00	2.46	8.00	150.00	3.00	0	.00
0 82.33	.00331					.00064	.05		3.40			3.00		
0 31966.20	3308.85	5.41	3314.26	3360.0	3.74	.22	3314.48	.00	2.46	8.00	150.00	3.00	0	.00
0 81.18	.00331					.00074	.06		3.40			3.00		
0 32047.38	3309.12	5.18	3314.30	3360.0	3.92	.24	3314.54	.00	2.46	8.00	150.00	3.00	0	.00
0 80.53	.00331					.00086	.07		3.40			3.00		
0 32127.90	3309.39	4.96	3314.35	3360.0	4.11	.26	3314.61	.00	2.46	8.00	150.00	3.00	0	.00
0 80.51	.00331					.00100	.08		3.40			3.00		
0 32208.41	3309.65	4.75	3314.40	3360.0	4.31	.29	3314.69	.00	2.46	8.00	150.00	3.00	0	.00
0 81.36	.00331					.00116	.09		3.40			3.00		
0 32289.77	3309.92	4.54	3314.46	3360.0	4.52	.32	3314.78	.00	2.46	8.00	150.00	3.00	0	.00
0 83.46	.00331					.00135	.11		3.40			3.00		
0 32373.24	3310.20	4.35	3314.55	3360.0	4.74	.35	3314.89	.00	2.46	8.00	150.00	3.00	0	.00
0 87.51	.00331					.00156	.14		3.40			3.00		
0 32460.75	3310.49	4.16	3314.65	3360.0	4.97	.38	3315.03	.00	2.46	8.00	150.00	3.00	0	.00
0 94.89	.00331					.00182	.17		3.40			3.00		
0 32555.64	3310.80	3.98	3314.78	3360.0	5.21	.42	3315.20	.00	2.46	8.00	150.00	3.00	0	.00
0 108.86	.00331					.00211	.23		3.40			3.00		
0 32664.51	3311.16	3.81	3314.97	3360.0	5.47	.46	3315.43	.00	2.46	8.00	150.00	3.00	0	.00
0 139.24	.00331					.00245	.34		3.40			3.00		
0 32803.75	3311.62	3.64	3315.26	3360.0	5.74	.51	3315.77	.00	2.46	8.00	150.00	3.00	0	.00
0 235.78	.00331					.00285	.67		3.40			3.00		
0 33039.53	3312.40	3.48	3315.89	3360.0	6.02	.56	3316.45	.00	2.46	8.00	150.00	3.00	0	.00
0 240.47	.00331					.00316	.76		3.40			3.00		
0 33280.00	3313.20	3.42	3316.62	3360.0	6.12	.58	3317.21	.00	2.46	8.00	150.00	3.00	0	.00
0JUNCT STR	.10000					.06282	1.26					3.00		
0 33300.00	3315.20	2.42	3317.62	2956.0	7.76	.94	3318.56	.00	2.26	8.00	150.00	3.00	0	.00
0 11.35	.01000					.00873	.10		2.27			3.00		
0 33311.35	3315.31	2.31	3317.63	2956.0	8.14	1.03	3318.66	.00	2.26	8.00	150.00	3.00	0	.00
0 6.31	.01000					.00970	.06		2.27			3.00		
0 33317.66	3315.38	2.27	3317.65	2956.0	8.30	1.07	3318.72	.00	2.26	8.00	150.00	3.00	0	.00
0 2.34	.01000					.01000	.02		2.27			3.00		

WATER SURFACE PROFILE LISTING

KINGMAN MASTER DRAINAGE PLAN
MOHAVE2 STA 31,800 - 50,400
Q10

O	STATION	INVERT ELEV	DEPTH OF FLOW	W.S. ELEV	Q	VEL	VEL HEAD	ENERGY GRD.EL.	SUPER ELEV	CRITICAL DEPTH		HGT/ DIA	BASE/ ID NO.	ZL	NO PIER	AVBPR
O	L/ELEM	SO					SF AVE	HF			NORM DEPTH			ZR		
0	33320.00	3315.40	2.27	3317.67	2956.0	8.30	1.07	3318.74	.00	2.26		8.00	150.00	3.00	0	.00
0	.00	.01000					.00990	.00			2.27			3.00		
0	33320.00	3315.40	2.60	3318.00	2956.0	8.89	1.23	3319.23	.00	2.60		7.00	120.00	3.00	0	.00
0	1.78	.00469					.00912	.02			3.24			3.00		
0	33321.78	3315.41	2.72	3318.13	2956.0	8.47	1.12	3319.25	.00	2.60		7.00	120.00	3.00	0	.00
0	7.37	.00469					.00784	.06			3.24			3.00		
0	33329.15	3315.44	2.85	3318.29	2956.0	8.08	1.01	3319.30	.00	2.60		7.00	120.00	3.00	0	.00
0	18.47	.00469					.00674	.12			3.24			3.00		
0	33347.62	3315.53	2.98	3318.51	2956.0	7.70	.92	3319.43	.00	2.60		7.00	120.00	3.00	0	.00
0	46.96	.00469					.00579	.27			3.24			3.00		
0	33394.57	3315.75	3.11	3318.86	2956.0	7.34	.84	3319.70	.00	2.60		7.00	120.00	3.00	0	.00
0	168.94	.00469					.00503	.85			3.24			3.00		
0	33563.52	3316.54	3.24	3319.78	2956.0	7.04	.77	3320.55	.00	2.60		7.00	120.00	3.00	0	.00
0	8916.48	.00469					.00470	41.88			3.24			3.00		
0	42479.99	3358.40	3.24	3361.63	2956.0	7.04	.77	3362.40	.00	2.60		7.00	120.00	3.00	0	.00
0	.01	.00469					.02844	.00			3.24			3.00		
0	42480.00	3358.40	3.24	3361.64	2956.0	7.04	.77	3362.41	.00	2.60		7.00	120.00	3.00	0	.00
OJ	UNCT STR	.10000												3.00		
0	42500.00	3360.40	1.08	3361.48	1054.0	7.89	.97	3362.45	.00	1.32		7.00	120.00	3.00	0	.00
0	6.50	.02500					.02316	.15			1.07			3.00		
0	42506.50	3360.56	1.10	3361.66	1054.0	7.78	.94	3362.60	.00	1.32		7.00	120.00	3.00	0	.00
0	8.38	.02500					.02101	.18			1.07			3.00		
0	42514.88	3360.77	1.15	3361.92	1054.0	7.42	.86	3362.78	.00	1.32		7.00	120.00	3.00	0	.00
0	3.31	.02500					.01799	.06			1.07			3.00		
0	42518.19	3360.85	1.21	3362.06	1054.0	7.07	.78	3362.84	.00	1.32		7.00	120.00	3.00	0	.00
0	1.42	.02500					.01540	.02			1.07			3.00		
0	42519.61	3360.89	1.26	3362.15	1054.0	6.75	.71	3362.86	.00	1.32		7.00	120.00	3.00	0	.00
0	.39	.02500					.01318	.01			1.07			3.00		
0	42520.00	3360.90	1.32	3362.22	1054.0	6.43	.64	3362.86	.00	1.32		7.00	120.00	3.00	0	.00
0	42520.00	3360.90	2.29	3363.19	1054.0	8.11	1.02	3364.21	.00	2.29		6.00	50.00	3.00	0	.00
0	1.54	.00567					.00979	.02			2.73			3.00		
0	42521.54	3360.91	2.39	3363.29	1054.0	7.73	.93	3364.22	.00	2.29		6.00	50.00	3.00	0	.00
0	6.68	.00567					.00846	.06			2.73			3.00		
0	42528.21	3360.95	2.49	3363.44	1054.0	7.37	.84	3364.28	.00	2.29		6.00	50.00	3.00	0	.00

WATER SURFACE PROFILE LISTING

KINGMAN MASTER DRAINAGE PLAN

MOHAVE2 STA 31,800 - 50,400

Q10

0 STATION / 0 L/ELEM	INVERT ELEV / SO	DEPTH OF FLOW	W.S. ELEV	Q	VEL	VEL HEAD / SF AVE	ENERGY GRD.EL. / HF	SUPER ELEV	CRITICAL DEPTH / NORM DEPTH	HGT/ DIA	BASE/ ID NO.	ZL / ZR	NO PIER	AVBPR
0 18.41	.00567					.00732	.13		2.73			3.00		
0 42546.62	3361.05	2.60	3363.65	1054.0	7.03	.77	3364.41	.00	2.29	6.00	50.00	3.00	0	.00
0 62.96	.00567					.00633	.40		2.73			3.00		
0 42609.58	3361.41	2.71	3364.12	1054.0	6.70	.70	3364.81	.00	2.29	6.00	50.00	3.00	0	.00
0 111.89	.00567					.00577	.65		2.73			3.00		
0 42721.47	3362.04	2.73	3364.78	1054.0	6.62	.68	3365.46	.00	2.29	6.00	50.00	3.00	0	.00
0 7678.53	.00567					.00568	43.58		2.73			3.00		
0 50400.00	3405.60	2.73	3408.34	1054.0	6.62	.68	3409.02	.00	2.29	6.00	50.00	3.00	0	.00
0 -.00	.00567					.00284	.00		2.73			3.00		
0 50400.00	3405.60	2.73	3408.33	1054.0	6.62	.68	3409.02	.00	2.29	6.00	50.00	3.00	0	.00

1

WATER SURFACE PROFILE LISTING

KINGMAN MASTER DRAINAGE PLAN

LINE Ad

Q10

O	STATION	INVERT ELEV	DEPTH OF FLOW	W.S. ELEV	Q	VEL	VEL HEAD	ENERGY GRD.EL.	SUPER ELEV	CRITICAL DEPTH		HGT/ DIA	BASE/ ID NO.	ZL	NO PIER	AVBPR
O	L/ELEM	SO					SF AVE	HF			NORM DEPTH			ZR		
0	.00	3208.00	4.00	3212.00	3061.0	4.72	.35	3212.35	.00	2.31		7.00	150.00	3.00	0	.00
0	12.00	.01332					.00172	.02			2.13			3.00		
0	12.00	3208.16	3.83	3211.99	3061.0	4.95	.38	3212.37	.00	2.31		7.00	150.00	3.00	0	.00
0	11.36	.01332					.00200	.02			2.13			3.00		
0	23.36	3208.31	3.66	3211.97	3061.0	5.20	.42	3212.39	.00	2.31		7.00	150.00	3.00	0	.00
0	10.73	.01332					.00233	.02			2.13			3.00		
0	34.09	3208.45	3.50	3211.95	3061.0	5.45	.46	3212.42	.00	2.31		7.00	150.00	3.00	0	.00
0	10.09	.01332					.00271	.03			2.13			3.00		
0	44.18	3208.59	3.35	3211.93	3061.0	5.72	.51	3212.44	.00	2.31		7.00	150.00	3.00	0	.00
0	9.45	.01332					.00315	.03			2.13			3.00		
0	53.63	3208.71	3.20	3211.91	3061.0	5.99	.56	3212.47	.00	2.31		7.00	150.00	3.00	0	.00
0	8.80	.01332					.00366	.03			2.13			3.00		
0	62.43	3208.83	3.06	3211.89	3061.0	6.29	.61	3212.50	.00	2.31		7.00	150.00	3.00	0	.00
0	8.11	.01332					.00427	.03			2.13			3.00		
0	70.54	3208.94	2.92	3211.86	3061.0	6.59	.68	3212.54	.00	2.31		7.00	150.00	3.00	0	.00
0	7.38	.01332					.00497	.04			2.13			3.00		
0	77.93	3209.04	2.79	3211.83	3061.0	6.92	.74	3212.58	.00	2.31		7.00	150.00	3.00	0	.00
0	6.56	.01332					.00578	.04			2.13			3.00		
0	84.49	3209.13	2.67	3211.80	3061.0	7.25	.82	3212.61	.00	2.31		7.00	150.00	3.00	0	.00
0	5.59	.01332					.00674	.04			2.13			3.00		
0	90.08	3209.20	2.55	3211.75	3061.0	7.61	.90	3212.65	.00	2.31		7.00	150.00	3.00	0	.00
0	2.19	.01332					.00750	.02			2.13			3.00		
0	92.27	3209.23	2.50	3211.73	3061.0	7.77	.94	3212.67	.00	2.31		7.00	150.00	3.00	0	.00
O	HYDRAULIC JUMP													3.00		
0	92.27	3209.23	2.13	3211.36	3061.0	9.19	1.31	3212.67	.00	2.31		7.00	150.00	3.00	0	.00
0	2047.63	.01332					.01332	27.28			2.13			3.00		
0	2139.90	3236.50	2.13	3238.63	3061.0	9.19	1.31	3239.94	.00	2.31		7.00	150.00	3.00	0	.00
0	30.10	.01332					.01397	.42			2.13			3.00		
0	2170.00	3236.90	2.07	3238.97	3061.0	9.46	1.39	3240.36	.00	2.31		7.00	150.00	3.00	0	.00
0	1711.53	.01461					.01462	25.02			2.07			3.00		
0	3881.53	3261.91	2.07	3263.98	3061.0	9.46	1.39	3265.37	.00	2.31		7.00	150.00	3.00	0	.00
0	40.47	.01461					.01459	.59			2.07			3.00		
0	3922.00	3262.50	2.07	3264.57	3061.0	9.45	1.39	3265.96	.00	2.31		7.00	150.00	3.00	0	.00
0	.00	.01461					.01457	.00			2.07			3.00		

WATER SURFACE PROFILE LISTING

KINGMAN MASTER DRAINAGE PLAN

LINE Ad

Q10

O STATION / L/ELEM	INVERT ELEV / SO	DEPTH OF FLOW	W.S. ELEV	Q	VEL	VEL HEAD / SF AVE	ENERGY GRD.EL. / HF	SUPER ELEV	CRITICAL DEPTH / NORM DEPTH		HGT/ DIA	BASE/ ID NO.	ZL / ZR	NO PIER	AVBPR
0 3922.00	3262.50	2.07	3264.57	3061.0	9.45	1.39	3265.96	.00	2.31		7.00	150.00	3.00	0	.00
0 2160.44	.01457					.01457	31.48			2.07			3.00		
0 6082.44	3293.97	2.07	3296.04	3061.0	9.45	1.39	3297.43	.00	2.31		7.00	150.00	3.00	0	.00
0 29.56	.01457					.01459	.43			2.07			3.00		
0 6112.00	3294.40	2.07	3296.47	3061.0	9.46	1.39	3297.86	.00	2.31		7.00	150.00	3.00	0	.00
0 1930.54	.01461					.01462	28.22			2.07			3.00		
0 8042.54	3322.61	2.07	3324.68	3061.0	9.46	1.39	3326.07	.00	2.31		7.00	150.00	3.00	0	.00
0 40.46	.01461					.01459	.59			2.07			3.00		
0 8083.00	3323.20	2.07	3325.27	3061.0	9.45	1.39	3326.66	.00	2.31		7.00	150.00	3.00	0	.00
0 1946.12	.01456					.01457	28.35			2.07			3.00		
0 10029.12	3351.54	2.07	3353.61	3061.0	9.45	1.39	3355.00	.00	2.31		7.00	150.00	3.00	0	.00
0 24.88	.01456					.01459	.36			2.07			3.00		
0 10054.00	3351.90	2.07	3353.97	3061.0	9.46	1.39	3355.36	.00	2.31		7.00	150.00	3.00	0	.00
0 1930.54	.01461					.01462	28.22			2.07			3.00		
0 11984.54	3380.11	2.07	3382.18	3061.0	9.46	1.39	3383.57	.00	2.31		7.00	150.00	3.00	0	.00
0 40.46	.01461					.01459	.59			2.07			3.00		
0 12025.00	3380.70	2.07	3382.77	3061.0	9.45	1.39	3384.16	.00	2.31		7.00	150.00	3.00	0	.00
0 2160.44	.01457					.01457	31.48			2.07			3.00		
0 14185.44	3412.17	2.07	3414.24	3061.0	9.45	1.39	3415.63	.00	2.31		7.00	150.00	3.00	0	.00
0 29.56	.01457					.01459	.43			2.07			3.00		
0 14215.00	3412.60	2.07	3414.67	3061.0	9.46	1.39	3416.06	.00	2.31		7.00	150.00	3.00	0	.00
0 1938.33	.01461					.01462	28.33			2.07			3.00		
0 16153.33	3440.92	2.07	3442.99	3061.0	9.46	1.39	3444.38	.00	2.31		7.00	150.00	3.00	0	.00
0 32.67	.01461					.01435	.47			2.07			3.00		
0 16186.00	3441.40	2.10	3443.49	3061.0	9.35	1.36	3444.85	.00	2.31		7.00	150.00	3.00	0	.00
0 2160.69	.01408					.01408	30.43			2.10			3.00		
0 18346.69	3471.83	2.10	3473.93	3061.0	9.35	1.36	3475.28	.00	2.31		7.00	150.00	3.00	0	.00
0 33.31	.01408					.01462	.49			2.10			3.00		
0 18380.00	3472.30	2.05	3474.35	3061.0	9.56	1.42	3475.77	.00	2.31		7.00	150.00	3.00	0	.00
OJUNCT STR	.15000					.14075	2.81						3.00		
0 18400.00	3475.30	2.27	3477.57	2976.0	8.36	1.09	3478.66	.00	2.27		7.00	150.00	3.00	0	.00
0 4.42	.00786					.00946	.04			2.45			3.00		
0 18404.42	3475.33	2.37	3477.71	2976.0	7.98	.99	3478.70	.00	2.27		7.00	150.00	3.00	0	.00
0 28.84	.00786					.00830	.24			2.45			3.00		

WATER SURFACE PROFILE LISTING

KINGMAN MASTER DRAINAGE PLAN

LINE Ad

Q10

O STATION / O L/ELEM	INVERT ELEV / SO	DEPTH OF FLOW	W.S. ELEV	Q	VEL	VEL HEAD / SF AVE	ENERGY GRD.EL. / HF	SUPER ELEV	CRITICAL DEPTH / NORM DEPTH		HGT/ DIA	BASE/ ID NO.	ZL / ZR	NO PIER	AVBPR
0 18433.26	3475.56	2.45	3478.01	2976.0	7.72	.93	3478.94	.00	2.27		7.00	150.00	3.00	0	.00
0 5145.80	.00786					.00787	40.47			2.45			3.00		
0 23579.06	3515.99	2.45	3518.44	2976.0	7.72	.93	3519.37	.00	2.27		7.00	150.00	3.00	0	.00
OHYDRAULIC JUMP													3.00		
0 23579.06	3515.99	2.09	3518.08	2976.0	9.10	1.29	3519.37	.00	2.27		7.00	150.00	3.00	0	.00
0 .94	.00786					.01350	.01			2.45			3.00		
0 23580.00	3516.00	2.08	3518.08	2976.0	9.15	1.30	3519.38	.00	2.27		7.00	150.00	3.00	0	.00
OJUNCT STR	.15500					.14741	2.95						3.00		
0 23600.00	3519.10	2.08	3521.18	2887.0	8.90	1.23	3522.41	.00	2.22		7.00	150.00	3.00	0	.00
0 1144.72	.01292					.01292	14.79			2.08			3.00		
0 24744.72	3533.89	2.08	3535.96	2887.0	8.90	1.23	3537.19	.00	2.22		7.00	150.00	3.00	0	.00
0 24.61	.01292					.01332	.33			2.08			3.00		
0 24769.33	3534.20	2.04	3536.24	2887.0	9.07	1.28	3537.52	.00	2.22		7.00	150.00	3.00	0	.00
0 18.67	.01292					.01487	.28			2.08			3.00		
0 24788.00	3534.45	1.95	3536.39	2887.0	9.51	1.41	3537.80	.00	2.22		7.00	150.00	3.00	0	.00
0 12.00	.01292					.01734	.21			2.08			3.00		
0 24800.00	3534.60	1.86	3536.46	2887.0	9.98	1.55	3538.01	.00	2.22		7.00	150.00	3.00	0	.00
0 1984.65	.01865					.01868	37.07			1.86			3.00		
0 26784.65	3571.61	1.86	3573.47	2887.0	9.98	1.55	3575.02	.00	2.22		7.00	150.00	3.00	0	.00
0 15.35	.01865					.01870	.29			1.86			3.00		
0 26800.00	3571.90	1.86	3573.76	2887.0	9.98	1.55	3575.31	.00	2.22		7.00	150.00	3.00	0	.00
0 1000.00	.01870					.01871	18.71			1.86			3.00		
0 27800.00	3590.60	1.86	3592.46	2887.0	9.98	1.55	3594.01	.00	2.22		7.00	150.00	3.00	0	.00
0 940.60	.01870					.01871	17.60			1.86			3.00		
0 28740.60	3608.19	1.86	3610.05	2887.0	9.98	1.55	3611.60	.00	2.22		7.00	150.00	3.00	0	.00
0 59.40	.01870					.01866	1.11			1.86			3.00		
0 28800.00	3609.30	1.86	3611.16	2887.0	9.97	1.54	3612.71	.00	2.22		7.00	150.00	3.00	0	.00
0 965.94	.01860					.01861	17.98			1.86			3.00		
0 29765.94	3627.27	1.86	3629.13	2887.0	9.97	1.54	3630.67	.00	2.22		7.00	150.00	3.00	0	.00
0 34.06	.01860					.01866	.64			1.86			3.00		
0 29800.00	3627.90	1.86	3629.76	2887.0	9.98	1.55	3631.31	.00	2.22		7.00	150.00	3.00	0	.00
0 955.99	.01870					.01871	17.89			1.86			3.00		
0 30755.99	3645.78	1.86	3647.64	2887.0	9.98	1.55	3649.18	.00	2.22		7.00	150.00	3.00	0	.00
0 44.01	.01870					.01967	.87			1.86			3.00		

WATER SURFACE PROFILE LISTING

KINGMAN MASTER DRAINAGE PLAN

LINE Ad

Q10

O	STATION	INVERT ELEV	DEPTH OF FLOW	W.S. ELEV	Q	VEL	VEL HEAD	ENERGY GRD.EL.	SUPER ELEV	CRITICAL DEPTH		HGT/ DIA	BASE/ ID NO.	ZL	NO PIER	AVBPR
O	L/ELEM	SO					SF AVE	HF			NORM DEPTH			ZR		
0	30800.00	3646.60	1.81	3648.41	2887.0	10.29	1.64	3650.05	.00	2.22		7.00	150.00	3.00	0	.00
0	430.48	.02060					.02062	8.88			1.81			3.00		
0	31230.48	3655.47	1.81	3657.27	2887.0	10.29	1.64	3658.92	.00	2.22		7.00	150.00	3.00	0	.00
0	46.74	.02060					.02177	1.02			1.81			3.00		
0	31277.22	3656.43	1.75	3658.18	2887.0	10.63	1.76	3659.94	.00	2.22		7.00	150.00	3.00	0	.00
0	22.78	.02060					.02484	.57			1.81			3.00		
0	31300.00	3656.90	1.67	3658.57	2887.0	11.15	1.93	3660.50	.00	2.22		7.00	150.00	3.00	0	.00
0	-.00	.02060					.02676	.00			1.81			3.00		
0	31300.00	3656.90	1.67	3658.57	2887.0	11.15	1.93	3660.50	.00	2.22		7.00	150.00	3.00	0	.00
0	1914.53	.02675					.02676	51.23			1.67			3.00		
0	33214.53	3708.11	1.67	3709.78	2887.0	11.15	1.93	3711.72	.00	2.22		7.00	150.00	3.00	0	.00
0	85.47	.02675					.02673	2.29			1.67			3.00		
0	33300.00	3710.40	1.67	3712.07	2887.0	11.14	1.93	3714.00	.00	2.22		7.00	150.00	3.00	0	.00
0	2000.00	.02670					.02671	53.41			1.67			3.00		
0	35300.00	3763.80	1.67	3765.47	2887.0	11.14	1.93	3767.40	.00	2.22		7.00	150.00	3.00	0	.00
0	2000.00	.02670					.02671	53.41			1.67			3.00		
0	37300.00	3817.20	1.67	3818.87	2887.0	11.14	1.93	3820.80	.00	2.22		7.00	150.00	3.00	0	.00
0	1892.60	.02670					.02671	50.55			1.67			3.00		
0	39192.60	3867.73	1.67	3869.40	2887.0	11.14	1.93	3871.33	.00	2.22		7.00	150.00	3.00	0	.00
0	53.27	.02670					.02650	1.41			1.67			3.00		
0	39245.87	3869.15	1.68	3870.83	2887.0	11.09	1.91	3872.74	.00	2.22		7.00	150.00	3.00	0	.00
0	41.18	.02670					.02441	1.01			1.67			3.00		
0	39287.05	3870.25	1.76	3872.01	2887.0	10.57	1.74	3873.75	.00	2.22		7.00	150.00	3.00	0	.00
0	12.95	.02670					.02091	.27			1.67			3.00		
0	39300.00	3870.60	1.84	3872.44	2887.0	10.08	1.58	3874.02	.00	2.22		7.00	150.00	3.00	0	.00
0	-.00	.02670					.01930	.00			1.67			3.00		
0	39300.00	3870.60	1.84	3872.44	2887.0	10.08	1.58	3874.02	.00	2.22		7.00	150.00	3.00	0	.00
0	183.89	.01929					.01930	3.55			1.84			3.00		
0	39483.89	3874.15	1.84	3875.99	2887.0	10.08	1.58	3877.57	.00	2.22		7.00	150.00	3.00	0	.00
0	48.81	.01929					.01915	.93			1.84			3.00		
0	39532.70	3875.09	1.85	3876.94	2887.0	10.03	1.56	3878.50	.00	2.22		7.00	150.00	3.00	0	.00
0	33.67	.01929					.01765	.59			1.84			3.00		
0	39566.37	3875.74	1.94	3877.67	2887.0	9.56	1.42	3879.10	.00	2.22		7.00	150.00	3.00	0	.00
0	9.19	.01929					.01513	.14			1.84			3.00		

WATER SURFACE PROFILE LISTING

KINGMAN MASTER DRAINAGE PLAN

LINE Ad

Q10

0 STATION / 0 L/ELEM	INVERT ELEV / SO	DEPTH OF FLOW	W.S. ELEV	Q	VEL	VEL HEAD / SF AVE	ENERGY GRD.EL. / HF	SUPER ELEV	CRITICAL DEPTH / NORM DEPTH	HGT/ DIA / ZR	BASE/ ID NO.	ZL	NO PIER	AVBPR
0 39575.55	3875.91	2.03	3877.94	2887.0	9.12	1.29	3879.24	.00	2.22	7.00	150.00	3.00	0	.00
0 3.54	.01929					.01297	.05		1.84			3.00		
0 39579.09	3875.98	2.12	3878.11	2887.0	8.69	1.17	3879.28	.00	2.22	7.00	150.00	3.00	0	.00
0 .91	.01929					.01111	.01		1.84			3.00		
0 39580.00	3876.00	2.22	3878.22	2887.0	8.29	1.07	3879.29	.00	2.22	7.00	150.00	3.00	0	.00
0JUNCT STR	.20501					.10714	2.14					3.00		
0 39600.00	3880.10	1.65	3881.75	1638.0	6.42	.64	3882.39	.00	1.53	7.00	150.00	3.00	0	.00
0 39600.00	3880.10	2.24	3882.34	1638.0	8.41	1.10	3883.44	.00	2.29	7.00	80.00	3.00	0	.00
0 1927.19	.01095					.01095	21.11		2.24			3.00		
0 41527.19	3901.20	2.24	3903.45	1638.0	8.41	1.10	3904.55	.00	2.29	7.00	80.00	3.00	0	.00
0 10.93	.01095					.01142	.12		2.24			3.00		
0 41538.12	3901.32	2.19	3903.51	1638.0	8.63	1.16	3904.67	.00	2.29	7.00	80.00	3.00	0	.00
0 10.94	.01095					.01285	.14		2.24			3.00		
0 41549.05	3901.44	2.10	3903.54	1638.0	9.05	1.27	3904.81	.00	2.29	7.00	80.00	3.00	0	.00
0 9.09	.01095					.01493	.14		2.24			3.00		
0 41558.14	3901.54	2.01	3903.55	1638.0	9.50	1.40	3904.95	.00	2.29	7.00	80.00	3.00	0	.00
0 8.22	.01095					.01736	.14		2.24			3.00		
0 41566.36	3901.63	1.92	3903.55	1638.0	9.96	1.54	3905.09	.00	2.29	7.00	80.00	3.00	0	.00
0 7.61	.01095					.02019	.15		2.24			3.00		
0 41573.97	3901.72	1.83	3903.55	1638.0	10.45	1.70	3905.24	.00	2.29	7.00	80.00	3.00	0	.00
0 7.11	.01095					.02349	.17		2.24			3.00		
0 41581.08	3901.79	1.75	3903.55	1638.0	10.96	1.87	3905.41	.00	2.29	7.00	80.00	3.00	0	.00
0 6.68	.01095					.02733	.18		2.24			3.00		
0 41587.77	3901.87	1.68	3903.54	1638.0	11.49	2.05	3905.59	.00	2.29	7.00	80.00	3.00	0	.00
0 6.30	.01095					.03181	.20		2.24			3.00		
0 41594.06	3901.94	1.60	3903.54	1638.0	12.05	2.26	3905.79	.00	2.29	7.00	80.00	3.00	0	.00
0 5.94	.01095					.03704	.22		2.24			3.00		
0 41600.00	3902.00	1.53	3903.53	1638.0	12.64	2.48	3906.01	.00	2.29	7.00	80.00	3.00	0	.00
1														

WATER SURFACE PROFILE LISTING

KINGMAN MASTER DRAINAGE PLAN

LINE Ad46

Q10

O STATION / O L/ELEM	INVERT ELEV / SO	DEPTH OF FLOW	W.S. ELEV	Q	VEL	VEL HEAD / SF AVE	ENERGY GRD.EL. / HF	SUPER ELEV	CRITICAL DEPTH / NORM DEPTH	HGT/ DIA	BASE/ ID NO.	ZL / ZR	NO PIER	AVBPR
0 .00	3880.00	3.00	3883.00	537.0	4.97	.38	3883.38	.00	2.05	7.00	30.00	2.00	0	.00
0 1.41	.04400					.00314	.00		1.37			2.00		
0 1.41	3880.06	2.92	3882.98	537.0	5.14	.41	3883.39	.00	2.05	7.00	30.00	2.00	0	.00
OHYDRAULIC JUMP												2.00		
0 1.41	3880.06	1.37	3881.43	537.0	11.99	2.23	3883.66	.00	2.05	7.00	30.00	2.00	0	.00
0 1897.98	.04400					.04400	83.50		1.37			2.00		
0 1899.39	3963.57	1.37	3964.94	537.0	11.99	2.23	3967.18	.00	2.05	7.00	30.00	2.00	0	.00
0 46.48	.04400					.04290	1.99		1.37			2.00		
0 1945.88	3965.62	1.39	3967.01	537.0	11.80	2.16	3969.17	.00	2.05	7.00	30.00	2.00	0	.00
0 26.39	.04400					.03891	1.03		1.37			2.00		
0 1972.27	3966.78	1.45	3968.23	537.0	11.25	1.97	3970.20	.00	2.05	7.00	30.00	2.00	0	.00
0 10.89	.04400					.03354	.37		1.37			2.00		
0 1983.16	3967.26	1.52	3968.78	537.0	10.72	1.79	3970.56	.00	2.05	7.00	30.00	2.00	0	.00
0 6.30	.04400					.02892	.18		1.37			2.00		
0 1989.46	3967.54	1.58	3969.12	537.0	10.22	1.62	3970.74	.00	2.05	7.00	30.00	2.00	0	.00
0 4.06	.04400					.02495	.10		1.37			2.00		
0 1993.52	3967.72	1.65	3969.37	537.0	9.75	1.48	3970.85	.00	2.05	7.00	30.00	2.00	0	.00
0 2.72	.04400					.02153	.06		1.37			2.00		
0 1996.24	3967.83	1.73	3969.56	537.0	9.30	1.34	3970.90	.00	2.05	7.00	30.00	2.00	0	.00
0 1.81	.04400					.01859	.03		1.37			2.00		
0 1998.05	3967.91	1.80	3969.72	537.0	8.86	1.22	3970.94	.00	2.05	7.00	30.00	2.00	0	.00
0 1.14	.04400					.01605	.02		1.37			2.00		
0 1999.19	3967.96	1.88	3969.85	537.0	8.45	1.11	3970.96	.00	2.05	7.00	30.00	2.00	0	.00
0 .62	.04400					.01386	.01		1.37			2.00		
0 1999.81	3967.99	1.96	3969.96	537.0	8.06	1.01	3970.96	.00	2.05	7.00	30.00	2.00	0	.00
0 .19	.04400					.01197	.00		1.37			2.00		
0 2000.00	3968.00	2.05	3970.05	537.0	7.68	.92	3970.97	.00	2.05	7.00	30.00	2.00	0	.00
1														

WATER SURFACE PROFILE LISTING

KINGMAN MASTER DRAINAGE PLAN

LINE Ae

Q10

O	STATION	INVERT ELEV	DEPTH OF FLOW	W.S. ELEV	Q	VEL	VEL HEAD	ENERGY GRD.EL.	SUPER ELEV	CRITICAL DEPTH		HGT/ DIA	BASE/ ID NO.	ZL	NO PIER	AVBPR
O	L/ELEM	SO					SF AVE	HF			NORM DEPTH			ZR		
0	.00	3215.00	3.00	3218.00	2522.0	4.02	.25	3218.25	.00	1.69		7.00	200.00	3.00	0	.00
0	29.10	.00550					.00176	.05			2.08			3.00		
0	29.10	3215.16	2.87	3218.03	2522.0	4.22	.28	3218.30	.00	1.69		7.00	200.00	3.00	0	.00
0	29.16	.00550					.00205	.06			2.08			3.00		
0	58.27	3215.32	2.74	3218.06	2522.0	4.42	.30	3218.36	.00	1.69		7.00	200.00	3.00	0	.00
0	29.69	.00550					.00239	.07			2.08			3.00		
0	87.96	3215.48	2.61	3218.10	2522.0	4.64	.33	3218.43	.00	1.69		7.00	200.00	3.00	0	.00
0	30.97	.00550					.00279	.09			2.08			3.00		
0	118.92	3215.65	2.50	3218.15	2522.0	4.87	.37	3218.52	.00	1.69		7.00	200.00	3.00	0	.00
0	33.62	.00550					.00325	.11			2.08			3.00		
0	152.54	3215.84	2.39	3218.22	2522.0	5.10	.40	3218.63	.00	1.69		7.00	200.00	3.00	0	.00
0	39.31	.00550					.00380	.15			2.08			3.00		
0	191.85	3216.06	2.28	3218.33	2522.0	5.35	.45	3218.78	.00	1.69		7.00	200.00	3.00	0	.00
0	54.51	.00550					.00443	.24			2.08			3.00		
0	246.36	3216.36	2.17	3218.53	2522.0	5.62	.49	3219.02	.00	1.69		7.00	200.00	3.00	0	.00
0	127.65	.00550					.00514	.66			2.08			3.00		
0	374.00	3217.06	2.08	3219.14	2522.0	5.87	.54	3219.68	.00	1.69		7.00	200.00	3.00	0	.00
0	1626.00	.00550					.00551	8.96			2.08			3.00		
0	2000.00	3226.00	2.08	3228.08	2522.0	5.87	.54	3228.62	.00	1.69		7.00	200.00	3.00	0	.00
0	26.65	.00750					.00597	.16			1.90			3.00		
0	2026.65	3226.20	1.99	3228.19	2522.0	6.15	.59	3228.78	.00	1.69		7.00	200.00	3.00	0	.00
0	58.82	.00750					.00697	.41			1.90			3.00		
0	2085.46	3226.64	1.90	3228.54	2522.0	6.45	.65	3229.19	.00	1.69		7.00	200.00	3.00	0	.00
0	1154.54	.00750					.00751	8.67			1.90			3.00		
0	3240.00	3235.30	1.90	3237.20	2522.0	6.45	.65	3237.85	.00	1.69		7.00	200.00	3.00	0	.00
0	23.59	.00905					.00814	.19			1.80			3.00		
0	3263.59	3235.51	1.81	3237.33	2522.0	6.77	.71	3238.04	.00	1.69		7.00	200.00	3.00	0	.00
0	22.38	.00905					.00891	.20			1.80			3.00		
0	3285.97	3235.72	1.80	3237.51	2522.0	6.83	.73	3238.24	.00	1.69		7.00	200.00	3.00	0	.00
0	584.03	.00905					.00905	5.29			1.80			3.00		
0	3870.00	3241.00	1.80	3242.80	2522.0	6.83	.73	3243.52	.00	1.69		7.00	200.00	3.00	0	.00
0	18.65	.00889					.00897	.17			1.81			3.00		
0	3888.65	3241.17	1.81	3242.97	2522.0	6.80	.72	3243.69	.00	1.69		7.00	200.00	3.00	0	.00
0	608.36	.00889					.00890	5.41			1.81			3.00		

WATER SURFACE PROFILE LISTING

KINGMAN MASTER DRAINAGE PLAN

LINE Ae

Q10

O	STATION	INVERT ELEV	DEPTH OF FLOW	W.S. ELEV	Q	VEL	VEL HEAD	ENERGY GRD.EL.	SUPER ELEV	CRITICAL DEPTH		HGT/ DIA	BASE/ ID NO.	ZL	NO PIER	AVBPR
O	L/ELEM	SO					SF AVE	HF			NORM DEPTH			ZR		
0	4497.01	3246.57	1.81	3248.38	2522.0	6.80	.72	3249.10	.00	1.69		7.00	200.00	3.00	0	.00
														3.00		
O	HYDRAULIC JUMP															
0	4497.01	3246.57	1.58	3248.15	2522.0	7.81	.95	3249.10	.00	1.69		7.00	200.00	3.00	0	.00
0	2.99	.00889					.01494	.04			1.81			3.00		
0	4500.00	3246.60	1.52	3248.12	2522.0	8.12	1.02	3249.14	.00	1.69		7.00	200.00	3.00	0	.00
0	1123.51	.01588					.01589	17.85			1.52			3.00		
0	5623.51	3264.44	1.52	3265.96	2522.0	8.12	1.02	3266.99	.00	1.69		7.00	200.00	3.00	0	.00
0	22.49	.01588					.01580	.36			1.52			3.00		
0	5646.00	3264.80	1.52	3266.32	2522.0	8.09	1.02	3267.34	.00	1.69		7.00	200.00	3.00	0	.00
0	360.19	.01571					.01571	5.66			1.52			3.00		
0	6006.19	3270.46	1.52	3271.98	2522.0	8.09	1.02	3273.00	.00	1.69		7.00	200.00	3.00	0	.00
0	21.81	.01571					.01607	.35			1.52			3.00		
0	6028.00	3270.80	1.50	3272.30	2522.0	8.20	1.04	3273.35	.00	1.69		7.00	200.00	3.00	0	.00
0	340.57	.01640					.01642	5.59			1.50			3.00		
0	6368.57	3276.38	1.50	3277.89	2522.0	8.20	1.04	3278.93	.00	1.69		7.00	200.00	3.00	0	.00
0	22.37	.01640					.01583	.35			1.50			3.00		
0	6390.94	3276.75	1.54	3278.29	2522.0	8.01	1.00	3279.29	.00	1.69		7.00	200.00	3.00	0	.00
0	7.72	.01640					.01414	.11			1.50			3.00		
0	6398.66	3276.88	1.61	3278.49	2522.0	7.64	.91	3279.40	.00	1.69		7.00	200.00	3.00	0	.00
0	1.34	.01640					.01209	.02			1.50			3.00		
0	6400.00	3276.90	1.69	3278.59	2522.0	7.28	.82	3279.41	.00	1.69		7.00	200.00	3.00	0	.00
1																

WATER SURFACE PROFILE LISTING

KINGMAN MASTER DRAINAGE PLAN

LINE Af

Q10

O	STATION	INVERT ELEV	DEPTH OF FLOW	W.S. ELEV	Q	VEL	VEL HEAD	ENERGY GRD.EL.	SUPER ELEV	CRITICAL DEPTH		HGT/ DIA	BASE/ ID NO.	ZL	NO PIER	AVBPR
O	L/ELEM	SO					SF AVE	HF			NORM DEPTH			ZR		
0	.00	3235.00	4.00	3239.00	5529.0	5.28	.43	3239.43	.00	2.45		8.00	250.00	3.00	0	.00
0	71.39	.00396					.00207	.15			3.22			3.00		
0	71.39	3235.28	3.82	3239.10	5529.0	5.53	.48	3239.58	.00	2.45		8.00	250.00	3.00	0	.00
0	79.46	.00396					.00241	.19			3.22			3.00		
0	150.84	3235.60	3.65	3239.25	5529.0	5.80	.52	3239.77	.00	2.45		8.00	250.00	3.00	0	.00
0	96.61	.00396					.00281	.27			3.22			3.00		
0	247.45	3235.98	3.49	3239.47	5529.0	6.09	.58	3240.04	.00	2.45		8.00	250.00	3.00	0	.00
0	144.85	.00396					.00328	.47			3.22			3.00		
0	392.30	3236.55	3.33	3239.88	5529.0	6.38	.63	3240.52	.00	2.45		8.00	250.00	3.00	0	.00
0	305.71	.00396					.00374	1.14			3.22			3.00		
0	698.01	3237.76	3.22	3240.98	5529.0	6.61	.68	3241.66	.00	2.45		8.00	250.00	3.00	0	.00
0	185.99	.00396					.00396	.74			3.22			3.00		
0	884.00	3238.50	3.22	3241.72	5529.0	6.61	.68	3242.40	.00	2.45		8.00	250.00	3.00	0	.00
0	40.25	.00619					.00429	.17			2.82			3.00		
0	924.25	3238.75	3.07	3241.82	5529.0	6.94	.75	3242.57	.00	2.45		8.00	250.00	3.00	0	.00
0	53.49	.00619					.00501	.27			2.82			3.00		
0	977.73	3239.08	2.94	3242.02	5529.0	7.28	.82	3242.84	.00	2.45		8.00	250.00	3.00	0	.00
0	113.50	.00619					.00579	.66			2.82			3.00		
0	1091.24	3239.78	2.82	3242.60	5529.0	7.59	.90	3243.50	.00	2.45		8.00	250.00	3.00	0	.00
0	696.76	.00619					.00620	4.32			2.82			3.00		
0	1788.00	3244.10	2.82	3246.92	5529.0	7.59	.90	3247.81	.00	2.45		8.00	250.00	3.00	0	.00
0	92.34	.00608					.00614	.57			2.83			3.00		
0	1880.34	3244.66	2.83	3247.49	5529.0	7.55	.89	3248.38	.00	2.45		8.00	250.00	3.00	0	.00
0	811.66	.00608					.00609	4.94			2.83			3.00		
0	2692.00	3249.60	2.83	3252.43	5529.0	7.55	.89	3253.32	.00	2.45		8.00	250.00	3.00	0	.00
0	50.65	.00737					.00660	.33			2.67			3.00		
0	2742.65	3249.97	2.70	3252.68	5529.0	7.92	.98	3253.65	.00	2.45		8.00	250.00	3.00	0	.00
0	54.23	.00737					.00724	.39			2.67			3.00		
0	2796.87	3250.37	2.67	3253.05	5529.0	8.01	1.00	3254.05	.00	2.45		8.00	250.00	3.00	0	.00
0	2175.13	.00737					.00737	16.03			2.67			3.00		
0	4972.00	3266.40	2.67	3269.07	5529.0	8.01	1.00	3270.07	.00	2.45		8.00	250.00	3.00	0	.00
0	3.16	.01218					.00769	.02			2.30			3.00		
0	4975.16	3266.44	2.61	3269.05	5529.0	8.22	1.05	3270.10	.00	2.45		8.00	250.00	3.00	0	.00
OHYDRAULIC JUMP														3.00		

WATER SURFACE PROFILE LISTING

KINGMAN MASTER DRAINAGE PLAN

LINE Af

Q10

0 STATION / 0 L/ELEM	INVERT ELEV / SO	DEPTH OF FLOW	W.S. ELEV	Q	VEL	VEL HEAD / SF AVE	ENERGY GRD.EL. / HF	SUPER ELEV	CRITICAL DEPTH / NORM DEPTH	HGT/ DIA	BASE/ ID NO.	ZL / ZR	NO PIER	AVBPR
0 4975.16	3266.44	2.30	3268.74	5529.0	9.35	1.36	3270.10	.00	2.45	8.00	250.00	3.00	0	.00
0 894.09	.01218					.01219	10.90		2.30			3.00		
0 5869.25	3277.33	2.30	3279.63	5529.0	9.35	1.36	3280.99	.00	2.45	8.00	250.00	3.00	0	.00
0 26.39	.01218					.01259	.33		2.30			3.00		
0 5895.64	3277.65	2.26	3279.91	5529.0	9.53	1.41	3281.32	.00	2.45	8.00	250.00	3.00	0	.00
0 20.36	.01218					.01409	.29		2.30			3.00		
0 5916.00	3277.90	2.16	3280.06	5529.0	10.00	1.55	3281.61	.00	2.45	8.00	250.00	3.00	0	.00
0 .00	.01218					.01518	.00		2.30			3.00		
0 5916.00	3277.90	2.16	3280.06	5529.0	10.00	1.55	3281.61	.00	2.45	8.00	250.00	3.00	0	.00
0 832.98	.01516					.01518	12.64		2.16			3.00		
0 6748.98	3290.53	2.16	3292.68	5529.0	10.00	1.55	3294.24	.00	2.45	8.00	250.00	3.00	0	.00
0 38.11	.01516					.01441	.55		2.16			3.00		
0 6787.09	3291.10	2.23	3293.33	5529.0	9.68	1.46	3294.79	.00	2.45	8.00	250.00	3.00	0	.00
0 10.66	.01516					.01266	.14		2.16			3.00		
0 6797.76	3291.27	2.33	3293.60	5529.0	9.23	1.32	3294.92	.00	2.45	8.00	250.00	3.00	0	.00
0 2.24	.01516					.01084	.02		2.16			3.00		
0 6800.00	3291.30	2.44	3293.74	5529.0	8.80	1.20	3294.94	.00	2.45	8.00	250.00	3.00	0	.00
0 1224.92	.01000					.01000	12.25		2.44			3.00		
0 8024.92	3303.55	2.44	3305.99	5529.0	8.80	1.20	3307.19	.00	2.45	8.00	250.00	3.00	0	.00
0 4.13	.01000					.01017	.04		2.44			3.00		
0 8029.05	3303.59	2.42	3306.01	5529.0	8.89	1.23	3307.24	.00	2.45	8.00	250.00	3.00	0	.00
0 10.95	.01000					.01121	.12		2.44			3.00		
0 8040.00	3303.70	2.31	3306.01	5529.0	9.32	1.35	3307.36	.00	2.45	8.00	250.00	3.00	0	.00
0 .00	.01000					.01208	.00		2.44			3.00		
0 8040.00	3303.70	2.31	3306.01	5529.0	9.32	1.35	3307.36	.00	2.45	8.00	250.00	3.00	0	.00
0 925.09	.01208					.01208	11.18		2.31			3.00		
0 8965.09	3314.87	2.31	3317.18	5529.0	9.32	1.35	3318.53	.00	2.45	8.00	250.00	3.00	0	.00
0 18.91	.01208					.01211	.23		2.31			3.00		
0 8984.00	3315.10	2.31	3317.41	5529.0	9.34	1.35	3318.76	.00	2.45	8.00	250.00	3.00	0	.00
0 1165.52	.01212					.01213	14.14		2.31			3.00		
0 10149.52	3329.22	2.31	3331.53	5529.0	9.34	1.35	3332.88	.00	2.45	8.00	250.00	3.00	0	.00
0 14.48	.01212					.01216	.18		2.31			3.00		
0 10164.00	3329.40	2.30	3331.70	5529.0	9.35	1.36	3333.06	.00	2.45	8.00	250.00	3.00	0	.00
0 917.54	.01218					.01219	11.18		2.30			3.00		

WATER SURFACE PROFILE LISTING

KINGMAN MASTER DRAINAGE PLAN

LINE Af

Q10

O STATION / O L/ELEM	INVERT ELEV / SO	DEPTH OF FLOW	W.S. ELEV	Q	VEL	VEL HEAD / SF AVE	ENERGY GRD.EL. / HF	SUPER ELEV	CRITICAL DEPTH / NORM DEPTH	HGT/ DIA	BASE/ ID NO.	ZL / ZR	NO PIER	AVBPR
0 11081.54	3340.58	2.30	3342.88	5529.0	9.35	1.36	3344.24	.00	2.45	8.00	250.00	3.00	0	.00
0 26.46	.01218					.01214	.32		2.30			3.00		
0 11108.00	3340.90	2.31	3343.21	5529.0	9.32	1.35	3344.56	.00	2.45	8.00	250.00	3.00	0	.00
0 922.94	.01208					.01208	11.15		2.31			3.00		
0 12030.94	3352.05	2.31	3354.35	5529.0	9.32	1.35	3355.71	.00	2.45	8.00	250.00	3.00	0	.00
0 21.06	.01208					.01214	.26		2.31			3.00		
0 12052.00	3352.30	2.30	3354.60	5529.0	9.35	1.36	3355.96	.00	2.45	8.00	250.00	3.00	0	.00
0 913.49	.01218					.01219	11.13		2.30			3.00		
0 12965.49	3363.43	2.30	3365.73	5529.0	9.35	1.36	3367.09	.00	2.45	8.00	250.00	3.00	0	.00
0 30.51	.01218					.01216	.37		2.30			3.00		
0 12996.00	3363.80	2.31	3366.10	5529.0	9.34	1.35	3367.46	.00	2.45	8.00	250.00	3.00	0	.00
0 1165.18	.01212					.01213	14.14		2.31			3.00		
0 14161.18	3377.92	2.31	3380.23	5529.0	9.34	1.35	3381.58	.00	2.45	8.00	250.00	3.00	0	.00
0 14.82	.01212					.01216	.18		2.31			3.00		
0 14176.00	3378.10	2.30	3380.40	5529.0	9.35	1.36	3381.76	.00	2.45	8.00	250.00	3.00	0	.00
0 917.54	.01218					.01219	11.18		2.30			3.00		
0 15093.54	3389.28	2.30	3391.58	5529.0	9.35	1.36	3392.94	.00	2.45	8.00	250.00	3.00	0	.00
0 26.46	.01218					.01214	.32		2.30			3.00		
0 15120.00	3389.60	2.31	3391.91	5529.0	9.32	1.35	3393.26	.00	2.45	8.00	250.00	3.00	0	.00
0 922.94	.01208					.01208	11.15		2.31			3.00		
0 16042.94	3400.75	2.31	3403.05	5529.0	9.32	1.35	3404.41	.00	2.45	8.00	250.00	3.00	0	.00
0 21.06	.01208					.01214	.26		2.31			3.00		
0 16064.00	3401.00	2.30	3403.30	5529.0	9.35	1.36	3404.66	.00	2.45	8.00	250.00	3.00	0	.00
0 914.88	.01218					.01219	11.15		2.30			3.00		
0 16978.88	3412.15	2.30	3414.45	5529.0	9.35	1.36	3415.81	.00	2.45	8.00	250.00	3.00	0	.00
0 22.26	.01218					.01192	.27		2.30			3.00		
0 17001.14	3412.42	2.33	3414.75	5529.0	9.22	1.32	3416.07	.00	2.45	8.00	250.00	3.00	0	.00
0 6.86	.01218					.01081	.07		2.30			3.00		
0 17008.00	3412.50	2.44	3414.94	5529.0	8.79	1.20	3416.15	.00	2.45	8.00	250.00	3.00	0	.00
0 570.96	.00996					.00997	5.69		2.44			3.00		
0 17578.96	3418.19	2.44	3420.63	5529.0	8.79	1.20	3421.83	.00	2.45	8.00	250.00	3.00	0	.00
0 1.04	.00996					.00991	.01		2.44			3.00		
0 17580.00	3418.20	2.45	3420.65	5529.0	8.76	1.19	3421.84	.00	2.45	8.00	250.00	3.00	0	.00
OJUNCT STR	.10000											3.00		

WATER SURFACE PROFILE LISTING

KINGMAN MASTER DRAINAGE PLAN
LINE Af
Q10

O	STATION	INVERT ELEV	DEPTH OF FLOW	W.S. ELEV	Q	VEL	VEL HEAD	ENERGY GRD.EL.	SUPER ELEV	CRITICAL DEPTH		HGT/ DIA	BASE/ ID NO.	ZL	NO PIER	AVBPR
O	L/ELEM	SO					SF AVE	HF			NORM DEPTH			ZR		
0	17600.00	3420.20	.29	3420.49	226.0	3.06	.15	3420.64	.00	.29		8.00	250.00	3.00	0	.00
0	17600.00	3420.20	1.47	3421.67	226.0	6.32	.62	3422.29	.00	1.47		5.00	20.00	3.00	0	.00
0	.95	.00776					.01166	.01			1.68			3.00		
0	17600.95	3420.21	1.53	3421.73	226.0	6.03	.57	3422.30	.00	1.47		5.00	20.00	3.00	0	.00
0	4.65	.00776					.01012	.05			1.68			3.00		
0	17605.60	3420.24	1.59	3421.83	226.0	5.75	.51	3422.34	.00	1.47		5.00	20.00	3.00	0	.00
0	17.31	.00776					.00879	.15			1.68			3.00		
0	17622.92	3420.38	1.65	3422.03	226.0	5.48	.47	3422.50	.00	1.47		5.00	20.00	3.00	0	.00
0	38.33	.00776					.00797	.31			1.68			3.00		
0	17661.24	3420.68	1.68	3422.35	226.0	5.39	.45	3422.80	.00	1.47		5.00	20.00	3.00	0	.00
0	54.76	.00776					.00777	.43			1.68			3.00		
0	17716.00	3421.10	1.68	3422.78	226.0	5.39	.45	3423.23	.00	1.47		5.00	20.00	3.00	0	.00
0	5.45	.01208					.00836	.05			1.48			3.00		
0	17721.45	3421.17	1.61	3422.78	226.0	5.65	.50	3423.27	.00	1.47		5.00	20.00	3.00	0	.00
0	5.51	.01208					.00962	.05			1.48			3.00		
0	17726.95	3421.23	1.55	3422.78	226.0	5.93	.55	3423.33	.00	1.47		5.00	20.00	3.00	0	.00
0	6.42	.01208					.01108	.07			1.48			3.00		
0	17733.37	3421.31	1.49	3422.80	226.0	6.22	.60	3423.40	.00	1.47		5.00	20.00	3.00	0	.00
0	2.56	.01208					.01197	.03			1.48			3.00		
0	17735.94	3421.34	1.48	3422.82	226.0	6.25	.61	3423.43	.00	1.47		5.00	20.00	3.00	0	.00
0	452.06	.01208					.01207	5.46			1.48			3.00		
0	18188.00	3426.80	1.48	3428.28	226.0	6.25	.61	3428.89	.00	1.47		5.00	20.00	3.00	0	.00
0	1.67	.01229					.01219	.02			1.47			3.00		
0	18189.67	3426.82	1.47	3428.29	226.0	6.29	.62	3428.91	.00	1.47		5.00	20.00	3.00	0	.00
0	234.33	.01229					.01230	2.88			1.47			3.00		
0	18424.00	3429.70	1.47	3431.17	226.0	6.29	.62	3431.79	.00	1.47		5.00	20.00	3.00	0	.00
0	1.85	.01187					.01209	.02			1.49			3.00		
0	18425.85	3429.72	1.49	3431.21	226.0	6.22	.60	3431.81	.00	1.47		5.00	20.00	3.00	0	.00
0	234.15	.01187					.01187	2.78			1.49			3.00		
0	18660.00	3432.50	1.49	3433.99	226.0	6.22	.60	3434.59	.00	1.47		5.00	20.00	3.00	0	.00
0	2.12	.01229					.01209	.03			1.47			3.00		
0	18662.12	3432.53	1.47	3434.00	226.0	6.29	.62	3434.61	.00	1.47		5.00	20.00	3.00	0	.00
0	469.88	.01229					.01230	5.78			1.47			3.00		
0	19132.00	3438.30	1.47	3439.77	226.0	6.29	.62	3440.39	.00	1.47		5.00	20.00	3.00	0	.00

WATER SURFACE PROFILE LISTING

KINGMAN MASTER DRAINAGE PLAN

LINE Af

Q10

O	STATION	INVERT ELEV	DEPTH OF FLOW	W.S. ELEV	Q	VEL	VEL HEAD	ENERGY GRD.EL.	SUPER ELEV	CRITICAL DEPTH		HGT/ DIA	BASE/ ID NO.	ZL	NO PIER	AVBPR
O	L/ELEM	SO					SF AVE	HF			NORM DEPTH			ZR		
0	1.43	.01208					.01219	.02			1.48			3.00		
0	19133.43	3438.32	1.48	3439.80	226.0	6.25	.61	3440.40	.00	1.47		5.00	20.00	3.00	0	.00
0	942.57	.01208					.01207	11.38			1.48			3.00		
0	20076.00	3449.70	1.48	3451.18	226.0	6.25	.61	3451.79	.00	1.47		5.00	20.00	3.00	0	.00
0	1.98	.01218					.01213	.02			1.48			3.00		
0	20077.98	3449.72	1.48	3451.20	226.0	6.27	.61	3451.81	.00	1.47		5.00	20.00	3.00	0	.00
0	942.02	.01218					.01219	11.48			1.48			3.00		
0	21020.00	3461.20	1.48	3462.68	226.0	6.27	.61	3463.29	.00	1.47		5.00	20.00	3.00	0	.00
0	1.77	.01208					.01213	.02			1.48			3.00		
0	21021.77	3461.22	1.48	3462.70	226.0	6.25	.61	3463.31	.00	1.47		5.00	20.00	3.00	0	.00
0	942.23	.01208					.01207	11.38			1.48			3.00		
0	21964.00	3472.60	1.48	3474.08	226.0	6.25	.61	3474.69	.00	1.47		5.00	20.00	3.00	0	.00
0	1.18	.00665					.01128	.01			1.75			3.00		
0	21965.18	3472.61	1.54	3474.15	226.0	5.96	.55	3474.70	.00	1.47		5.00	20.00	3.00	0	.00
0	4.03	.00665					.00979	.04			1.75			3.00		
0	21969.21	3472.63	1.60	3474.24	226.0	5.68	.50	3474.74	.00	1.47		5.00	20.00	3.00	0	.00
0	10.48	.00665					.00851	.09			1.75			3.00		
0	21979.69	3472.70	1.67	3474.37	226.0	5.42	.46	3474.83	.00	1.47		5.00	20.00	3.00	0	.00
0	35.02	.00665					.00739	.26			1.75			3.00		
0	22014.71	3472.94	1.74	3474.67	226.0	5.17	.42	3475.09	.00	1.47		5.00	20.00	3.00	0	.00
0	62.51	.00665					.00676	.42			1.75			3.00		
0	22077.22	3473.35	1.75	3475.10	226.0	5.11	.41	3475.51	.00	1.47		5.00	20.00	3.00	0	.00
0	322.78	.00665					.00665	2.15			1.75			3.00		
0	22400.00	3475.50	1.75	3477.25	226.0	5.11	.41	3477.66	.00	1.47		5.00	20.00	3.00	0	.00
1																

WATER SURFACE PROFILE LISTING

KINGMAN MASTER DRAINAGE PLAN

LINE Ag

Q10

O	STATION	INVERT ELEV	DEPTH OF FLOW	W.S. ELEV	Q	VEL	VEL HEAD	ENERGY GRD.EL.	SUPER ELEV	CRITICAL DEPTH		HGT/ DIA	BASE/ ID NO.	ZL	NO PIER	AVBPR
O	L/ELEM	SO					SF AVE	HF			NORM DEPTH			ZR		
0	.00	3242.00	5.00	3247.00	2201.0	3.83	.23	3247.23	.00	2.41		8.00	100.00	3.00	0	.00
0	12.82	.01526					.00090	.01			2.13			3.00		
0	12.82	3242.20	4.79	3246.99	2201.0	4.01	.25	3247.24	.00	2.41		8.00	100.00	3.00	0	.00
0	12.24	.01526					.00104	.01			2.13			3.00		
0	25.06	3242.38	4.59	3246.98	2201.0	4.21	.28	3247.25	.00	2.41		8.00	100.00	3.00	0	.00
0	11.67	.01526					.00121	.01			2.13			3.00		
0	36.73	3242.56	4.40	3246.96	2201.0	4.42	.30	3247.27	.00	2.41		8.00	100.00	3.00	0	.00
0	11.11	.01526					.00140	.02			2.13			3.00		
0	47.83	3242.73	4.22	3246.95	2201.0	4.63	.33	3247.28	.00	2.41		8.00	100.00	3.00	0	.00
0	10.55	.01526					.00162	.02			2.13			3.00		
0	58.38	3242.89	4.04	3246.93	2201.0	4.86	.37	3247.30	.00	2.41		8.00	100.00	3.00	0	.00
0	9.99	.01526					.00188	.02			2.13			3.00		
0	68.37	3243.04	3.87	3246.91	2201.0	5.09	.40	3247.32	.00	2.41		8.00	100.00	3.00	0	.00
0	9.43	.01526					.00217	.02			2.13			3.00		
0	77.81	3243.19	3.71	3246.89	2201.0	5.34	.44	3247.34	.00	2.41		8.00	100.00	3.00	0	.00
0	8.87	.01526					.00252	.02			2.13			3.00		
0	86.68	3243.32	3.55	3246.87	2201.0	5.60	.49	3247.36	.00	2.41		8.00	100.00	3.00	0	.00
0	8.30	.01526					.00292	.02			2.13			3.00		
0	94.98	3243.45	3.40	3246.85	2201.0	5.88	.54	3247.38	.00	2.41		8.00	100.00	3.00	0	.00
0	7.72	.01526					.00339	.03			2.13			3.00		
0	102.70	3243.57	3.25	3246.82	2201.0	6.16	.59	3247.41	.00	2.41		8.00	100.00	3.00	0	.00
0	7.10	.01526					.00394	.03			2.13			3.00		
0	109.80	3243.68	3.11	3246.79	2201.0	6.47	.65	3247.44	.00	2.41		8.00	100.00	3.00	0	.00
0	6.45	.01526					.00457	.03			2.13			3.00		
0	116.25	3243.77	2.98	3246.75	2201.0	6.78	.71	3247.47	.00	2.41		8.00	100.00	3.00	0	.00
0	5.73	.01526					.00531	.03			2.13			3.00		
0	121.98	3243.86	2.85	3246.71	2201.0	7.11	.79	3247.50	.00	2.41		8.00	100.00	3.00	0	.00
0	4.92	.01526					.00616	.03			2.13			3.00		
0	126.90	3243.94	2.73	3246.66	2201.0	7.46	.86	3247.53	.00	2.41		8.00	100.00	3.00	0	.00
0	.72	.01526					.00670	.00			2.13			3.00		
0	127.62	3243.95	2.71	3246.66	2201.0	7.52	.88	3247.53	.00	2.41		8.00	100.00	3.00	0	.00
OHYDRAULIC JUMP														3.00		
0	127.62	3243.95	2.13	3246.08	2201.0	9.71	1.46	3247.54	.00	2.41		8.00	100.00	3.00	0	.00
0	28317.05	.01526					.01526	*****			2.13			3.00		

WATER SURFACE PROFILE LISTING

KINGMAN MASTER DRAINAGE PLAN

LINE Ag

Q10

O	STATION	INVERT ELEV	DEPTH OF FLOW	W.S. ELEV	Q	VEL	VEL HEAD	ENERGY GRD.EL.	SUPER ELEV	CRITICAL DEPTH		HGT/ DIA	BASE/ ID NO.	ZL	NO PIER	AVBPR
O	L/ELEM	SO					SF AVE	HF			NORM DEPTH			ZR		
0	28444.67	3676.11	2.13	3678.24	2201.0	9.71	1.46	3679.70	.00	2.41		8.00	100.00	3.00	0	.00
0	34.43	.01526					.01447	.50			2.13			3.00		
0	28479.10	3676.63	2.20	3678.84	2201.0	9.38	1.37	3680.20	.00	2.41		8.00	100.00	3.00	0	.00
0	9.13	.01526					.01271	.12			2.13			3.00		
0	28488.23	3676.77	2.30	3679.08	2201.0	8.94	1.24	3680.32	.00	2.41		8.00	100.00	3.00	0	.00
0	1.77	.01526					.01092	.02			2.13			3.00		
0	28490.00	3676.80	2.41	3679.21	2201.0	8.52	1.13	3680.34	.00	2.41		8.00	100.00	3.00	0	.00
OJUNCT STR		.01997					.07119	.36						3.00		
0	28495.00	3676.90	3.38	3680.28	2029.0	5.46	.46	3680.74	.00	2.28		8.00	100.00	3.00	0	.00
0	5.00	.02002					.00292	.01			1.87			3.00		
0	28500.00	3677.00	3.25	3680.25	2029.0	5.69	.50	3680.75	.00	2.28		8.00	100.00	3.00	0	.00
0	-.00	.02002					.02016	.00			1.87			3.00		
0	28500.00	3677.00	1.77	3678.77	2029.0	13.40	2.79	3681.56	.00	2.62		8.00	80.00	3.00	0	.00
0	2381.27	.03720					.03721	88.61			1.77			3.00		
0	30881.27	3765.58	1.77	3767.36	2029.0	13.40	2.79	3770.15	.00	2.62		8.00	80.00	3.00	0	.00
0	66.34	.03720					.03508	2.33			1.77			3.00		
0	30947.60	3768.05	1.84	3769.89	2029.0	12.89	2.58	3772.48	.00	2.62		8.00	80.00	3.00	0	.00
0	23.00	.03720					.03064	.70			1.77			3.00		
0	30970.60	3768.91	1.92	3770.83	2029.0	12.29	2.35	3773.18	.00	2.62		8.00	80.00	3.00	0	.00
0	11.60	.03720					.02635	.31			1.77			3.00		
0	30982.20	3769.34	2.01	3771.35	2029.0	11.72	2.14	3773.49	.00	2.62		8.00	80.00	3.00	0	.00
0	7.06	.03720					.02266	.16			1.77			3.00		
0	30989.26	3769.60	2.10	3771.70	2029.0	11.18	1.94	3773.65	.00	2.62		8.00	80.00	3.00	0	.00
0	4.58	.03720					.01950	.09			1.77			3.00		
0	30993.84	3769.77	2.20	3771.97	2029.0	10.66	1.77	3773.73	.00	2.62		8.00	80.00	3.00	0	.00
0	2.99	.03720					.01678	.05			1.77			3.00		
0	30996.83	3769.88	2.30	3772.18	2029.0	10.16	1.60	3773.78	.00	2.62		8.00	80.00	3.00	0	.00
0	1.86	.03720					.01445	.03			1.77			3.00		
0	30998.69	3769.95	2.40	3772.35	2029.0	9.69	1.46	3773.81	.00	2.62		8.00	80.00	3.00	0	.00
0	1.00	.03720					.01244	.01			1.77			3.00		
0	30999.69	3769.99	2.51	3772.50	2029.0	9.24	1.33	3773.82	.00	2.62		8.00	80.00	3.00	0	.00
0	.31	.03720					.01071	.00			1.77			3.00		
0	31000.00	3770.00	2.62	3772.62	2029.0	8.80	1.20	3773.83	.00	2.62		8.00	80.00	3.00	0	.00
OJUNCT STR		.00386					.00502	10.54						3.00		

WATER SURFACE PROFILE LISTING

KINGMAN MASTER DRAINAGE PLAN

LINE Ag

Q10

0 STATION / 0 L/ELEM	INVERT ELEV / SO	DEPTH OF FLOW	W.S. ELEV	Q	VEL	VEL HEAD / SF AVE	ENERGY GRD.EL. / HF	SUPER ELEV	CRITICAL DEPTH / NORM DEPTH	HGT/ DIA	BASE/ ID NO.	ZL / ZR	NO PIER	AVBPR
0 33100.00	3778.10	6.24	3784.34	1039.0	1.69	.04	3784.39	.06	1.70	8.00	80.00	3.00	0	.00
0 98.68	.00400					.00155	.15		4.66			3.00		
0 33198.68	3778.49	6.00	3784.49	1039.0	1.77	.05	3784.54	.06	1.70	8.00	80.00	3.00	0	.00
0 1.32	.00400					.00166	.00		4.66			3.00		
0 33200.00	3778.50	5.99	3784.49	1039.0	1.77	.05	3784.54	.00	1.70	8.00	80.00	3.00	0	.00
0 53.90	.00447					.00016	.01		2.23			3.00		
0 33253.90	3778.74	5.76	3784.50	1039.0	1.86	.05	3784.55	.00	1.70	8.00	80.00	3.00	0	.00
0 52.17	.00447					.00019	.01		2.23			3.00		
0 33306.07	3778.97	5.53	3784.50	1039.0	1.95	.06	3784.56	.00	1.70	8.00	80.00	3.00	0	.00
0 50.50	.00447					.00021	.01		2.23			3.00		
0 33356.57	3779.20	5.31	3784.51	1039.0	2.04	.06	3784.57	.00	1.70	8.00	80.00	3.00	0	.00
0 48.91	.00447					.00025	.01		2.23			3.00		
0 33405.48	3779.42	5.09	3784.51	1039.0	2.14	.07	3784.58	.00	1.70	8.00	80.00	3.00	0	.00
0 47.38	.00447					.00029	.01		2.23			3.00		
0 33452.87	3779.63	4.89	3784.52	1039.0	2.24	.08	3784.60	.00	1.70	8.00	80.00	3.00	0	.00
0 45.93	.00447					.00033	.02		2.23			3.00		
0 33498.80	3779.84	4.69	3784.53	1039.0	2.35	.09	3784.61	.00	1.70	8.00	80.00	3.00	0	.00
0 44.56	.00447					.00038	.02		2.23			3.00		
0 33543.36	3780.04	4.50	3784.54	1039.0	2.47	.09	3784.63	.00	1.70	8.00	80.00	3.00	0	.00
0 43.27	.00447					.00044	.02		2.23			3.00		
0 33586.64	3780.23	4.32	3784.54	1039.0	2.59	.10	3784.65	.00	1.70	8.00	80.00	3.00	0	.00
0 42.08	.00447					.00051	.02		2.23			3.00		
0 33628.71	3780.42	4.14	3784.56	1039.0	2.72	.11	3784.67	.00	1.70	8.00	80.00	3.00	0	.00
0 40.98	.00447					.00059	.02		2.23			3.00		
0 33669.70	3780.60	3.97	3784.57	1039.0	2.85	.13	3784.69	.00	1.70	8.00	80.00	3.00	0	.00
0 39.99	.00447					.00068	.03		2.23			3.00		
0 33709.69	3780.78	3.80	3784.58	1039.0	2.99	.14	3784.72	.00	1.70	8.00	80.00	3.00	0	.00
0 39.14	.00447					.00079	.03		2.23			3.00		
0 33748.82	3780.95	3.65	3784.60	1039.0	3.13	.15	3784.75	.00	1.70	8.00	80.00	3.00	0	.00
0 38.43	.00447					.00091	.03		2.23			3.00		
0 33787.25	3781.13	3.49	3784.62	1039.0	3.29	.17	3784.79	.00	1.70	8.00	80.00	3.00	0	.00
0 37.90	.00447					.00105	.04		2.23			3.00		
0 33825.15	3781.30	3.35	3784.64	1039.0	3.45	.18	3784.83	.00	1.70	8.00	80.00	3.00	0	.00
0 37.60	.00447					.00122	.05		2.23			3.00		

WATER SURFACE PROFILE LISTING

KINGMAN MASTER DRAINAGE PLAN

LINE Ag

Q10

O	STATION	INVERT ELEV	DEPTH OF FLOW	W.S. ELEV	Q	VEL	VEL HEAD	ENERGY GRD.EL.	SUPER ELEV	CRITICAL DEPTH		HGT/ DIA	BASE/ ID NO.	ZL	NO PIER	AVBPR
O	L/ELEM	SO					SF AVE	HF			NORM DEPTH			ZR		
0	33862.75	3781.46	3.21	3784.67	1039.0	3.62	.20	3784.87	.00	1.70		8.00	80.00	3.00	0	.00
0	37.61	.00447					.00141	.05			2.23			3.00		
0	33900.36	3781.63	3.07	3784.70	1039.0	3.79	.22	3784.93	.00	1.70		8.00	80.00	3.00	0	.00
0	38.02	.00447					.00164	.06			2.23			3.00		
0	33938.38	3781.80	2.94	3784.74	1039.0	3.98	.25	3784.99	.00	1.70		8.00	80.00	3.00	0	.00
0	39.03	.00447					.00190	.07			2.23			3.00		
0	33977.41	3781.98	2.82	3784.79	1039.0	4.17	.27	3785.06	.00	1.70		8.00	80.00	3.00	0	.00
0	41.01	.00447					.00220	.09			2.23			3.00		
0	34018.41	3782.16	2.70	3784.86	1039.0	4.37	.30	3785.15	.00	1.70		8.00	80.00	3.00	0	.00
0	44.68	.00447					.00256	.11			2.23			3.00		
0	34063.09	3782.36	2.58	3784.94	1039.0	4.59	.33	3785.27	.00	1.70		8.00	80.00	3.00	0	.00
0	51.83	.00447					.00297	.15			2.23			3.00		
0	34114.92	3782.59	2.47	3785.06	1039.0	4.81	.36	3785.42	.00	1.70		8.00	80.00	3.00	0	.00
0	68.42	.00447					.00344	.24			2.23			3.00		
0	34183.34	3782.90	2.36	3785.26	1039.0	5.05	.40	3785.66	.00	1.70		8.00	80.00	3.00	0	.00
0	132.26	.00447					.00400	.53			2.23			3.00		
0	34315.61	3783.49	2.26	3785.75	1039.0	5.29	.44	3786.19	.00	1.70		8.00	80.00	3.00	0	.00
0	180.32	.00447					.00439	.79			2.23			3.00		
0	34495.92	3784.29	2.23	3786.53	1039.0	5.36	.45	3786.98	.00	1.70		8.00	80.00	3.00	0	.00
0	404.07	.00447					.00447	1.81			2.23			3.00		
0	34899.99	3786.10	2.23	3788.34	1039.0	5.36	.45	3788.78	.00	1.70		8.00	80.00	3.00	0	.00
0	.01	.00447					.00224	.00			2.23			3.00		
0	34900.00	3786.10	2.23	3788.34	1039.0	5.36	.45	3788.78	.00	1.70		8.00	80.00	3.00	0	.00
1																

WATER SURFACE PROFILE LISTING

KINGMAN MASTER DRAINAGE PLAN

LINE Ah

Q10

O STATION	INVERT ELEV	DEPTH OF FLOW	W.S. ELEV	Q	VEL	VEL HEAD	ENERGY GRD.EL.	SUPER ELEV	CRITICAL DEPTH		HGT/ DIA	BASE/ ID NO.	ZL	NO PIER	AVBPR
O L/ELEM	SO					SF AVE	HF			NORM DEPTH			ZR		
0 .00	3242.00	3.00	3245.00	501.0	2.83	.12	3245.12	.00	1.42		5.00	50.00	3.00	0	.00
0 19.30	.00667					.00100	.02			1.69			3.00		
0 19.30	3242.13	2.88	3245.01	501.0	2.97	.14	3245.14	.00	1.42		5.00	50.00	3.00	0	.00
0 18.81	.00667					.00116	.02			1.69			3.00		
0 38.11	3242.25	2.76	3245.01	501.0	3.11	.15	3245.17	.00	1.42		5.00	50.00	3.00	0	.00
0 18.38	.00667					.00134	.02			1.69			3.00		
0 56.50	3242.38	2.65	3245.02	501.0	3.27	.17	3245.19	.00	1.42		5.00	50.00	3.00	0	.00
0 18.02	.00667					.00154	.03			1.69			3.00		
0 74.52	3242.50	2.54	3245.04	501.0	3.42	.18	3245.22	.00	1.42		5.00	50.00	3.00	0	.00
0 17.75	.00667					.00179	.03			1.69			3.00		
0 92.27	3242.62	2.43	3245.05	501.0	3.59	.20	3245.25	.00	1.42		5.00	50.00	3.00	0	.00
0 17.58	.00667					.00207	.04			1.69			3.00		
0 109.85	3242.73	2.33	3245.07	501.0	3.77	.22	3245.29	.00	1.42		5.00	50.00	3.00	0	.00
0 17.56	.00667					.00239	.04			1.69			3.00		
0 127.41	3242.85	2.24	3245.09	501.0	3.95	.24	3245.33	.00	1.42		5.00	50.00	3.00	0	.00
0 17.74	.00667					.00277	.05			1.69			3.00		
0 145.15	3242.97	2.14	3245.11	501.0	4.14	.27	3245.38	.00	1.42		5.00	50.00	3.00	0	.00
0 18.25	.00667					.00320	.06			1.69			3.00		
0 163.40	3243.09	2.05	3245.14	501.0	4.35	.29	3245.44	.00	1.42		5.00	50.00	3.00	0	.00
0 19.32	.00667					.00371	.07			1.69			3.00		
0 182.72	3243.22	1.97	3245.18	501.0	4.56	.32	3245.51	.00	1.42		5.00	50.00	3.00	0	.00
0 21.48	.00667					.00430	.09			1.69			3.00		
0 204.20	3243.36	1.88	3245.24	501.0	4.78	.36	3245.60	.00	1.42		5.00	50.00	3.00	0	.00
0 26.39	.00667					.00499	.13			1.69			3.00		
0 230.59	3243.54	1.80	3245.34	501.0	5.01	.39	3245.73	.00	1.42		5.00	50.00	3.00	0	.00
0 42.60	.00667					.00578	.25			1.69			3.00		
0 273.18	3243.82	1.73	3245.55	501.0	5.26	.43	3245.98	.00	1.42		5.00	50.00	3.00	0	.00
0 71.40	.00667					.00644	.46			1.69			3.00		
0 344.58	3244.30	1.69	3245.99	501.0	5.38	.45	3246.44	.00	1.42		5.00	50.00	3.00	0	.00
0 2655.42	.00667					.00668	17.73			1.69			3.00		
0 3000.00	3262.00	1.69	3263.69	501.0	5.38	.45	3264.14	.00	1.42		5.00	50.00	3.00	0	.00
0 70.42	.00597					.00633	.45			1.75			3.00		
0 3070.42	3262.42	1.75	3264.17	501.0	5.19	.42	3264.59	.00	1.42		5.00	50.00	3.00	0	.00
0 582.58	.00597					.00598	3.48			1.75			3.00		

WATER SURFACE PROFILE LISTING

KINGMAN MASTER DRAINAGE PLAN

LINE Ah

Q10

O STATION / O L/ELEM	INVERT ELEV / SO	DEPTH OF FLOW	W.S. ELEV	Q	VEL	VEL HEAD / SF AVE	ENERGY GRD.EL. / HF	SUPER ELEV	CRITICAL DEPTH / NORM DEPTH	HGT/ DIA	BASE/ ID NO.	ZL / ZR	NO PIER	AVBPR
0 3653.00	3265.90	1.75	3267.65	501.0	5.19	.42	3268.07	.00	1.42	5.00	50.00	3.00	0	.00
0 14.08	.00877					.00646	.09		1.56			3.00		
0 3667.08	3266.02	1.67	3267.69	501.0	5.45	.46	3268.16	.00	1.42	5.00	50.00	3.00	0	.00
0 19.90	.00877					.00749	.15		1.56			3.00		
0 3686.98	3266.20	1.60	3267.80	501.0	5.71	.51	3268.31	.00	1.42	5.00	50.00	3.00	0	.00
0 31.35	.00877					.00841	.26		1.56			3.00		
0 3718.33	3266.47	1.56	3268.03	501.0	5.87	.54	3268.57	.00	1.42	5.00	50.00	3.00	0	.00
0 607.67	.00877					.00877	5.33		1.56			3.00		
0 4326.00	3271.80	1.56	3273.36	501.0	5.87	.54	3273.90	.00	1.42	5.00	50.00	3.00	0	.00
0 28.56	.00891					.00885	.25		1.55			3.00		
0 4354.56	3272.05	1.55	3273.61	501.0	5.91	.54	3274.15	.00	1.42	5.00	50.00	3.00	0	.00
0 644.44	.00891					.00892	5.75		1.55			3.00		
0 4999.00	3277.80	1.55	3279.35	501.0	5.91	.54	3279.89	.00	1.42	5.00	50.00	3.00	0	.00
0 5.36	.01199					.00964	.05		1.42			3.00		
0 5004.36	3277.86	1.49	3279.35	501.0	6.19	.60	3279.95	.00	1.42	5.00	50.00	3.00	0	.00
0 5.55	.01199					.01118	.06		1.42			3.00		
0 5009.90	3277.93	1.42	3279.35	501.0	6.49	.66	3280.01	.00	1.42	5.00	50.00	3.00	0	.00
0 306.10	.01199					.01201	3.68		1.42			3.00		
0 5316.00	3281.60	1.42	3283.02	501.0	6.49	.66	3283.68	.00	1.42	5.00	50.00	3.00	0	.00
0 317.00	.01199					.01201	3.81		1.42			3.00		
0 5633.00	3285.40	1.42	3286.82	501.0	6.49	.66	3287.48	.00	1.42	5.00	50.00	3.00	0	.00
0 1.36	.01167					.01184	.02		1.43			3.00		
0 5634.36	3285.42	1.43	3286.85	501.0	6.43	.64	3287.49	.00	1.42	5.00	50.00	3.00	0	.00
0 315.64	.01167					.01167	3.68		1.43			3.00		
0 5950.00	3289.10	1.43	3290.53	501.0	6.43	.64	3291.18	.00	1.42	5.00	50.00	3.00	0	.00
0 1.54	.01199					.01184	.02		1.42			3.00		
0 5951.54	3289.12	1.42	3290.54	501.0	6.49	.66	3291.20	.00	1.42	5.00	50.00	3.00	0	.00
0 315.46	.01199					.01201	3.79		1.42			3.00		
0 6267.00	3292.90	1.42	3294.32	501.0	6.49	.66	3294.98	.00	1.42	5.00	50.00	3.00	0	.00
0 317.00	.01199					.01201	3.81		1.42			3.00		
0 6584.00	3296.70	1.42	3298.12	501.0	6.49	.66	3298.78	.00	1.42	5.00	50.00	3.00	0	.00
0 316.59	.01199					.01201	3.80		1.42			3.00		
0 6900.59	3300.50	1.42	3301.92	501.0	6.49	.66	3302.57	.00	1.42	5.00	50.00	3.00	0	.00
												3.00		

OHYDRAULIC JUMP

WATER SURFACE PROFILE LISTING

KINGMAN MASTER DRAINAGE PLAN

LINE Ah

Q10

O	STATION	INVERT ELEV	DEPTH OF FLOW	W.S. ELEV	Q	VEL	VEL HEAD	ENERGY GRD.EL.	SUPER ELEV	CRITICAL DEPTH		HGT/ DIA	BASE/ ID NO.	ZL	NO PIER	AVBPR
O	L/ELEM	SO					SF AVE	HF			NORM DEPTH			ZR		
0	6900.59	3300.50	1.41	3301.90	501.0	6.56	.67	3302.57	.00	1.42		5.00	50.00	3.00	0	.00
0	.41	.01199					.01239	.01			1.42			3.00		
0	6901.00	3300.50	1.41	3301.91	501.0	6.56	.67	3302.58	.00	1.42		5.00	50.00	3.00	0	.00
0	298.04	.01237					.01239	3.69			1.41			3.00		
0	7199.04	3304.19	1.41	3305.60	501.0	6.56	.67	3306.27	.00	1.42		5.00	50.00	3.00	0	.00
0	.96	.01237					.01224	.01			1.41			3.00		
0	7200.00	3304.20	1.42	3305.62	501.0	6.51	.66	3306.28	.00	1.42		5.00	50.00	3.00	0	.00
1																

WATER SURFACE PROFILE LISTING

KINGMAN MASTER DRAINAGE PLAN

LINE Ai

Q10

O STATION / O L/ELEM	INVERT ELEV / SO	DEPTH OF FLOW	W.S. ELEV	Q	VEL	VEL HEAD / SF AVE	ENERGY GRD.EL. / HF	SUPER ELEV	CRITICAL DEPTH / NORM DEPTH	HGT/ DIA	BASE/ ID NO.	ZL / ZR	NO PIER	AVBPR
0 .00	3258.00	4.00	3262.00	278.0	2.17	.07	3262.07	.00	1.66	5.00	20.00	3.00	0	.00
0 31.89	.00457					.00052	.02		2.18			3.00		
0 31.89	3258.15	3.86	3262.01	278.0	2.28	.08	3262.09	.00	1.66	5.00	20.00	3.00	0	.00
0 31.31	.00457					.00059	.02		2.18			3.00		
0 63.20	3258.29	3.73	3262.02	278.0	2.39	.09	3262.11	.00	1.66	5.00	20.00	3.00	0	.00
0 30.81	.00457					.00067	.02		2.18			3.00		
0 94.01	3258.43	3.60	3262.03	278.0	2.51	.10	3262.13	.00	1.66	5.00	20.00	3.00	0	.00
0 30.37	.00457					.00077	.02		2.18			3.00		
0 124.38	3258.57	3.48	3262.04	278.0	2.63	.11	3262.15	.00	1.66	5.00	20.00	3.00	0	.00
0 30.03	.00457					.00088	.03		2.18			3.00		
0 154.41	3258.71	3.35	3262.06	278.0	2.76	.12	3262.18	.00	1.66	5.00	20.00	3.00	0	.00
0 29.80	.00457					.00101	.03		2.18			3.00		
0 184.21	3258.84	3.24	3262.08	278.0	2.89	.13	3262.21	.00	1.66	5.00	20.00	3.00	0	.00
0 29.70	.00457					.00115	.03		2.18			3.00		
0 213.90	3258.98	3.12	3262.10	278.0	3.03	.14	3262.24	.00	1.66	5.00	20.00	3.00	0	.00
0 29.77	.00457					.00132	.04		2.18			3.00		
0 243.67	3259.11	3.01	3262.13	278.0	3.18	.16	3262.28	.00	1.66	5.00	20.00	3.00	0	.00
0 30.07	.00457					.00151	.05		2.18			3.00		
0 273.74	3259.25	2.90	3262.15	278.0	3.34	.17	3262.33	.00	1.66	5.00	20.00	3.00	0	.00
0 30.69	.00457					.00173	.05		2.18			3.00		
0 304.43	3259.39	2.80	3262.19	278.0	3.50	.19	3262.38	.00	1.66	5.00	20.00	3.00	0	.00
0 31.77	.00457					.00198	.06		2.18			3.00		
0 336.20	3259.54	2.70	3262.23	278.0	3.67	.21	3262.44	.00	1.66	5.00	20.00	3.00	0	.00
0 33.58	.00457					.00227	.08		2.18			3.00		
0 369.78	3259.69	2.60	3262.29	278.0	3.85	.23	3262.52	.00	1.66	5.00	20.00	3.00	0	.00
0 36.63	.00457					.00260	.10		2.18			3.00		
0 406.41	3259.86	2.50	3262.36	278.0	4.04	.25	3262.61	.00	1.66	5.00	20.00	3.00	0	.00
0 42.10	.00457					.00298	.13		2.18			3.00		
0 448.51	3260.05	2.41	3262.46	278.0	4.23	.28	3262.74	.00	1.66	5.00	20.00	3.00	0	.00
0 53.40	.00457					.00342	.18		2.18			3.00		
0 501.91	3260.29	2.32	3262.62	278.0	4.44	.31	3262.92	.00	1.66	5.00	20.00	3.00	0	.00
0 86.24	.00457					.00392	.34		2.18			3.00		
0 588.15	3260.69	2.24	3262.92	278.0	4.66	.34	3263.26	.00	1.66	5.00	20.00	3.00	0	.00
0 175.17	.00457					.00438	.77		2.18			3.00		

WATER SURFACE PROFILE LISTING

KINGMAN MASTER DRAINAGE PLAN

LINE Ai

Q10

O	STATION	INVERT ELEV	DEPTH OF FLOW	W.S. ELEV	Q	VEL	VEL HEAD	ENERGY GRD.EL.	SUPER ELEV	CRITICAL DEPTH		HGT/ DIA	BASE/ ID NO.	ZL	NO PIER	AVBPR
O	L/ELEM	SO					SF AVE	HF			NORM DEPTH			ZR		
0	763.32	3261.49	2.18	3263.67	278.0	4.80	.36	3264.03	.00	1.66		5.00	20.00	3.00	0	.00
0	2736.68	.00457					.00458	12.53			2.18			3.00		
0	3500.00	3274.00	2.18	3276.18	278.0	4.80	.36	3276.54	.00	1.66		5.00	20.00	3.00	0	.00
0	40.99	.00605					.00492	.20			2.02			3.00		
0	3540.99	3274.25	2.10	3276.35	278.0	5.03	.39	3276.74	.00	1.66		5.00	20.00	3.00	0	.00
0	100.40	.00605					.00565	.57			2.02			3.00		
0	3641.39	3274.85	2.02	3276.88	278.0	5.28	.43	3277.31	.00	1.66		5.00	20.00	3.00	0	.00
0	718.61	.00605					.00604	4.34			2.02			3.00		
0	4360.00	3279.20	2.02	3281.22	278.0	5.28	.43	3281.65	.00	1.66		5.00	20.00	3.00	0	.00
0	21.33	.00807					.00650	.14			1.86			3.00		
0	4381.33	3279.37	1.94	3281.31	278.0	5.54	.48	3281.79	.00	1.66		5.00	20.00	3.00	0	.00
0	44.59	.00807					.00747	.33			1.86			3.00		
0	4425.92	3279.73	1.87	3281.60	278.0	5.81	.52	3282.12	.00	1.66		5.00	20.00	3.00	0	.00
0	44.09	.00807					.00803	.35			1.86			3.00		
0	4470.01	3280.09	1.86	3281.95	278.0	5.83	.53	3282.48	.00	1.66		5.00	20.00	3.00	0	.00
0	769.99	.00807					.00807	6.21			1.86			3.00		
0	5240.00	3286.30	1.86	3288.16	278.0	5.83	.53	3288.69	.00	1.66		5.00	20.00	3.00	0	.00
0	37.84	.00818					.00813	.31			1.86			3.00		
0	5277.84	3286.61	1.86	3288.47	278.0	5.86	.53	3289.00	.00	1.66		5.00	20.00	3.00	0	.00
0	842.16	.00818					.00818	6.89			1.86			3.00		
0	6120.00	3293.50	1.86	3295.36	278.0	5.86	.53	3295.89	.00	1.66		5.00	20.00	3.00	0	.00
0	36.91	.00807					.00813	.30			1.86			3.00		
0	6156.91	3293.80	1.86	3295.66	278.0	5.83	.53	3296.19	.00	1.66		5.00	20.00	3.00	0	.00
0	843.09	.00807					.00807	6.80			1.86			3.00		
0	7000.00	3300.60	1.86	3302.46	278.0	5.83	.53	3302.99	.00	1.66		5.00	20.00	3.00	0	.00
0	3.09	.01476					.00868	.03			1.57			3.00		
0	7003.09	3300.65	1.79	3302.44	278.0	6.12	.58	3303.02	.00	1.66		5.00	20.00	3.00	0	.00
0	1.20	.01476					.00961	.01			1.57			3.00		
0	7004.29	3300.66	1.76	3302.42	278.0	6.26	.61	3303.03	.00	1.66		5.00	20.00	3.00	0	.00
OHYDRAULIC JUMP														3.00		
0	7004.29	3300.66	1.57	3302.23	278.0	7.16	.80	3303.03	.00	1.66		5.00	20.00	3.00	0	.00
0	174.21	.01476					.01478	2.57			1.57			3.00		
0	7178.49	3303.23	1.57	3304.81	278.0	7.16	.80	3305.60	.00	1.66		5.00	20.00	3.00	0	.00
0	13.11	.01476					.01512	.20			1.57			3.00		

WATER SURFACE PROFILE LISTING

KINGMAN MASTER DRAINAGE PLAN

LINE Ai

Q10

O	STATION	INVERT ELEV	DEPTH OF FLOW	W.S. ELEV	Q	VEL	VEL HEAD	ENERGY GRD.EL.	SUPER ELEV	CRITICAL DEPTH		HGT/ DIA	BASE/ ID NO.	ZL	NO PIER	AVBPR
O	L/ELEM	SO					SF AVE	HF			NORM DEPTH			ZR		
0	7191.60	3303.43	1.55	3304.98	278.0	7.27	.82	3305.80	.00	1.66		5.00	20.00	3.00	0	.00
0	11.26	.01476					.01663	.19			1.57			3.00		
0	7202.87	3303.59	1.49	3305.08	278.0	7.62	.90	3305.99	.00	1.66		5.00	20.00	3.00	0	.00
0	7.13	.01476					.01916	.14			1.57			3.00		
0	7210.00	3303.70	1.43	3305.13	278.0	8.00	.99	3306.12	.00	1.66		5.00	20.00	3.00	0	.00
0	175.18	.02048					.02052	3.59			1.43			3.00		
0	7385.18	3307.29	1.43	3308.72	278.0	8.00	.99	3309.71	.00	1.66		5.00	20.00	3.00	0	.00
0	24.60	.02048					.01947	.48			1.43			3.00		
0	7409.78	3307.79	1.48	3309.27	278.0	7.71	.92	3310.19	.00	1.66		5.00	20.00	3.00	0	.00
0	7.16	.02048					.01720	.12			1.43			3.00		
0	7416.94	3307.94	1.54	3309.47	278.0	7.35	.84	3310.31	.00	1.66		5.00	20.00	3.00	0	.00
0	2.46	.02048					.01493	.04			1.43			3.00		
0	7419.40	3307.99	1.60	3309.59	278.0	7.01	.76	3310.35	.00	1.66		5.00	20.00	3.00	0	.00
0	.60	.02048					.01296	.01			1.43			3.00		
0	7420.00	3308.00	1.66	3309.67	278.0	6.68	.69	3310.36	.00	1.66		5.00	20.00	3.00	0	.00
1																

WATER SURFACE PROFILE LISTING

KINGMAN MASTER DRAINAGE PLAN

LINE Aj

Q10

O	STATION	INVERT ELEV	DEPTH OF FLOW	W.S. ELEV	Q	VEL	VEL HEAD	ENERGY GRD.EL.	SUPER ELEV	CRITICAL DEPTH		HGT/ DIA	BASE/ ID NO.	ZL	NO PIER	AVBPR
O	L/ELEM	SO					SF AVE	HF			NORM DEPTH			ZR		
0	.00	3260.00	4.00	3264.00	134.0	1.05	.02	3264.02	.00	1.06		6.00	20.00	3.00	0	.00
0	17.19	.00797					.00012	.00			1.24			3.00		
0	17.19	3260.14	3.86	3264.00	134.0	1.10	.02	3264.02	.00	1.06		6.00	20.00	3.00	0	.00
0	16.71	.00797					.00014	.00			1.24			3.00		
0	33.90	3260.27	3.73	3264.00	134.0	1.15	.02	3264.02	.00	1.06		6.00	20.00	3.00	0	.00
0	16.24	.00797					.00016	.00			1.24			3.00		
0	50.14	3260.40	3.60	3264.00	134.0	1.21	.02	3264.02	.00	1.06		6.00	20.00	3.00	0	.00
0	15.78	.00797					.00018	.00			1.24			3.00		
0	65.93	3260.53	3.48	3264.00	134.0	1.27	.02	3264.03	.00	1.06		6.00	20.00	3.00	0	.00
0	15.34	.00797					.00020	.00			1.24			3.00		
0	81.26	3260.65	3.35	3264.00	134.0	1.33	.03	3264.03	.00	1.06		6.00	20.00	3.00	0	.00
0	14.90	.00797					.00023	.00			1.24			3.00		
0	96.17	3260.77	3.24	3264.00	134.0	1.39	.03	3264.03	.00	1.06		6.00	20.00	3.00	0	.00
0	14.48	.00797					.00027	.00			1.24			3.00		
0	10.97	.00797					.00105	.01			1.24			3.00		
0	110.64	3260.88	3.12	3264.00	134.0	1.46	.03	3264.04	.00	1.06		6.00	20.00	3.00	0	.00
0	14.07	.00797					.00031	.00			1.24			3.00		
0	124.71	3260.99	3.01	3264.00	134.0	1.53	.04	3264.04	.00	1.06		6.00	20.00	3.00	0	.00
0	13.67	.00797					.00035	.00			1.24			3.00		
0	138.38	3261.10	2.90	3264.01	134.0	1.61	.04	3264.05	.00	1.06		6.00	20.00	3.00	0	.00
0	13.28	.00797					.00040	.01			1.24			3.00		
0	151.67	3261.21	2.80	3264.01	134.0	1.69	.04	3264.05	.00	1.06		6.00	20.00	3.00	0	.00
0	12.91	.00797					.00046	.01			1.24			3.00		
0	164.58	3261.31	2.70	3264.01	134.0	1.77	.05	3264.06	.00	1.06		6.00	20.00	3.00	0	.00
0	12.55	.00797					.00053	.01			1.24			3.00		
0	177.13	3261.41	2.60	3264.01	134.0	1.85	.05	3264.06	.00	1.06		6.00	20.00	3.00	0	.00
0	12.20	.00797					.00060	.01			1.24			3.00		
0	189.33	3261.51	2.50	3264.01	134.0	1.95	.06	3264.07	.00	1.06		6.00	20.00	3.00	0	.00
0	11.87	.00797					.00069	.01			1.24			3.00		
0	201.20	3261.60	2.41	3264.01	134.0	2.04	.06	3264.08	.00	1.06		6.00	20.00	3.00	0	.00
0	11.56	.00797					.00079	.01			1.24			3.00		
0	212.76	3261.70	2.32	3264.02	134.0	2.14	.07	3264.09	.00	1.06		6.00	20.00	3.00	0	.00
0	11.26	.00797					.00091	.01			1.24			3.00		
0	224.01	3261.78	2.24	3264.02	134.0	2.24	.08	3264.10	.00	1.06		6.00	20.00	3.00	0	.00

WATER SURFACE PROFILE LISTING

KINGMAN MASTER DRAINAGE PLAN

LINE Aj

Q10

O	STATION	INVERT ELEV	DEPTH OF FLOW	W.S. ELEV	Q	VEL	VEL HEAD	ENERGY GRD.EL.	SUPER ELEV	CRITICAL DEPTH		HGT/ DIA	BASE/ ID NO.	ZL	NO PIER	AVBPR
O	L/ELEM	SO					SF AVE	HF			NORM DEPTH			ZR		
0	234.99	3261.87	2.15	3264.02	134.0	2.35	.09	3264.11	.00	1.06		6.00	20.00	3.00	0	.00
0	10.71	.00797					.00120	.01			1.24			3.00		
0	245.70	3261.96	2.07	3264.03	134.0	2.47	.09	3264.12	.00	1.06		6.00	20.00	3.00	0	.00
0	10.47	.00797					.00138	.01			1.24			3.00		
0	256.17	3262.04	1.99	3264.03	134.0	2.59	.10	3264.14	.00	1.06		6.00	20.00	3.00	0	.00
0	10.26	.00797					.00159	.02			1.24			3.00		
0	266.43	3262.12	1.92	3264.04	134.0	2.72	.11	3264.15	.00	1.06		6.00	20.00	3.00	0	.00
0	10.08	.00797					.00182	.02			1.24			3.00		
0	276.51	3262.20	1.84	3264.05	134.0	2.85	.13	3264.17	.00	1.06		6.00	20.00	3.00	0	.00
0	9.94	.00797					.00209	.02			1.24			3.00		
0	286.45	3262.28	1.77	3264.05	134.0	2.99	.14	3264.19	.00	1.06		6.00	20.00	3.00	0	.00
0	9.85	.00797					.00241	.02			1.24			3.00		
0	296.30	3262.36	1.70	3264.06	134.0	3.13	.15	3264.22	.00	1.06		6.00	20.00	3.00	0	.00
0	9.83	.00797					.00277	.03			1.24			3.00		
0	306.12	3262.44	1.64	3264.08	134.0	3.29	.17	3264.24	.00	1.06		6.00	20.00	3.00	0	.00
0	9.90	.00797					.00319	.03			1.24			3.00		
0	316.02	3262.52	1.57	3264.09	134.0	3.45	.18	3264.28	.00	1.06		6.00	20.00	3.00	0	.00
0	10.11	.00797					.00368	.04			1.24			3.00		
0	326.13	3262.60	1.51	3264.11	134.0	3.61	.20	3264.31	.00	1.06		6.00	20.00	3.00	0	.00
0	10.56	.00797					.00423	.04			1.24			3.00		
0	336.69	3262.68	1.45	3264.13	134.0	3.79	.22	3264.36	.00	1.06		6.00	20.00	3.00	0	.00
0	11.44	.00797					.00488	.06			1.24			3.00		
0	348.13	3262.77	1.39	3264.17	134.0	3.98	.25	3264.41	.00	1.06		6.00	20.00	3.00	0	.00
0	13.26	.00797					.00563	.07			1.24			3.00		
0	361.39	3262.88	1.34	3264.22	134.0	4.17	.27	3264.49	.00	1.06		6.00	20.00	3.00	0	.00
0	18.01	.00797					.00649	.12			1.24			3.00		
0	379.40	3263.02	1.28	3264.31	134.0	4.37	.30	3264.60	.00	1.06		6.00	20.00	3.00	0	.00
0	9.60	.00797					.00713	.07			1.24			3.00		
0	389.00	3263.10	1.27	3264.37	134.0	4.44	.31	3264.67	.00	1.06		6.00	20.00	3.00	0	.00
0	4.38	.01252					.00786	.03			1.08			3.00		
0	393.38	3263.16	1.22	3264.37	134.0	4.66	.34	3264.71	.00	1.06		6.00	20.00	3.00	0	.00
0	4.51	.01252					.00908	.04			1.08			3.00		
0	397.89	3263.21	1.17	3264.38	134.0	4.89	.37	3264.75	.00	1.06		6.00	20.00	3.00	0	.00
0	5.08	.01252					.01048	.05			1.08			3.00		

WATER SURFACE PROFILE LISTING

KINGMAN MASTER DRAINAGE PLAN

LINE Aj

Q10

0 STATION	INVERT ELEV	DEPTH OF FLOW	W.S. ELEV	Q	VEL	VEL HEAD	ENERGY GRD.EL.	SUPER ELEV	CRITICAL DEPTH		HGT/ DIA	BASE/ ID NO.	ZL	NO PIER	AVBPR
0 L/ELEM	SO					SF AVE	HF			NORM DEPTH			ZR		
0 402.97	3263.27	1.12	3264.39	134.0	5.13	.41	3264.80	.00	1.06		6.00	20.00	3.00	0	.00
0 6.67	.01252					.01188	.08			1.08			3.00		
0 409.64	3263.36	1.08	3264.44	134.0	5.32	.44	3264.88	.00	1.06		6.00	20.00	3.00	0	.00
0 9749.36	.01252					.01253	*****			1.08			3.00		
0 10159.00	3385.40	1.08	3386.48	134.0	5.32	.44	3386.92	.00	1.06		6.00	20.00	3.00	0	.00
0 3.03	.01309					.01282	.04			1.07			3.00		
0 10162.03	3385.44	1.07	3386.51	134.0	5.40	.45	3386.96	.00	1.06		6.00	20.00	3.00	0	.00
0 2174.97	.01309					.01311	28.51			1.07			3.00		
0 12337.00	3413.90	1.07	3414.97	134.0	5.40	.45	3415.42	.00	1.06		6.00	20.00	3.00	0	.00
0 1.23	.01306					.01309	.02			1.07			3.00		
0 12338.23	3413.92	1.07	3414.99	134.0	5.39	.45	3415.44	.00	1.06		6.00	20.00	3.00	0	.00
0 1813.77	.01306					.01307	23.70			1.07			3.00		
0 14152.00	3437.60	1.07	3438.67	134.0	5.39	.45	3439.12	.00	1.06		6.00	20.00	3.00	0	.00
0 8.73	.01309					.01309	.11			1.07			3.00		
0 14160.73	3437.71	1.07	3438.78	134.0	5.40	.45	3439.24	.00	1.06		6.00	20.00	3.00	0	.00
0 2169.27	.01309					.01311	28.44			1.07			3.00		
0 16330.00	3466.10	1.07	3467.17	134.0	5.40	.45	3467.62	.00	1.06		6.00	20.00	3.00	0	.00
0 1.23	.01306					.01309	.02			1.07			3.00		
0 16331.23	3466.12	1.07	3467.19	134.0	5.39	.45	3467.64	.00	1.06		6.00	20.00	3.00	0	.00
0 1813.77	.01306					.01307	23.70			1.07			3.00		
0 18145.00	3489.80	1.07	3490.87	134.0	5.39	.45	3491.32	.00	1.06		6.00	20.00	3.00	0	.00
0 1455.00	.01306					.01307	19.02			1.07			3.00		
0 19600.00	3508.80	1.07	3509.87	134.0	5.39	.45	3510.32	.00	1.06		6.00	20.00	3.00	0	.00

1

WATER SURFACE PROFILE LISTING

KINGMAN MASTER DRAINAGE PLAN

LINE Ak

Q10

O	STATION	INVERT ELEV	DEPTH OF FLOW	W.S. ELEV	Q	VEL	VEL HEAD	ENERGY GRD.EL.	SUPER ELEV	CRITICAL DEPTH		HGT/ DIA	BASE/ ID NO.	ZL	NO PIER	AVBPR
O	L/ELEM	SO					SF AVE	HF			NORM DEPTH			ZR		
0	.00	3292.00	3.00	3295.00	167.0	1.92	.06	3295.06	.00	1.21		6.00	20.00	3.00	0	.00
0	12.20	.00889					.00055	.01			1.36			3.00		
0	12.20	3292.11	2.89	3295.00	167.0	2.01	.06	3295.06	.00	1.21		6.00	20.00	3.00	0	.00
0	11.86	.00889					.00063	.01			1.36			3.00		
0	24.06	3292.21	2.79	3295.00	167.0	2.11	.07	3295.07	.00	1.21		6.00	20.00	3.00	0	.00
0	11.53	.00889					.00072	.01			1.36			3.00		
0	35.59	3292.32	2.69	3295.00	167.0	2.21	.08	3295.08	.00	1.21		6.00	20.00	3.00	0	.00
0	11.21	.00889					.00083	.01			1.36			3.00		
0	46.80	3292.42	2.59	3295.01	167.0	2.32	.08	3295.09	.00	1.21		6.00	20.00	3.00	0	.00
0	10.90	.00889					.00095	.01			1.36			3.00		
0	57.70	3292.51	2.49	3295.01	167.0	2.44	.09	3295.10	.00	1.21		6.00	20.00	3.00	0	.00
0	10.61	.00889					.00109	.01			1.36			3.00		
0	68.31	3292.61	2.40	3295.01	167.0	2.55	.10	3295.11	.00	1.21		6.00	20.00	3.00	0	.00
0	10.33	.00889					.00125	.01			1.36			3.00		
0	78.64	3292.70	2.31	3295.01	167.0	2.68	.11	3295.12	.00	1.21		6.00	20.00	3.00	0	.00
0	10.08	.00889					.00144	.01			1.36			3.00		
0	88.72	3292.79	2.23	3295.02	167.0	2.81	.12	3295.14	.00	1.21		6.00	20.00	3.00	0	.00
0	9.84	.00889					.00165	.02			1.36			3.00		
0	98.56	3292.88	2.14	3295.02	167.0	2.95	.14	3295.15	.00	1.21		6.00	20.00	3.00	0	.00
0	9.62	.00889					.00189	.02			1.36			3.00		
0	108.18	3292.96	2.06	3295.02	167.0	3.09	.15	3295.17	.00	1.21		6.00	20.00	3.00	0	.00
0	9.43	.00889					.00217	.02			1.36			3.00		
0	117.61	3293.05	1.98	3295.03	167.0	3.24	.16	3295.19	.00	1.21		6.00	20.00	3.00	0	.00
0	9.28	.00889					.00250	.02			1.36			3.00		
0	126.90	3293.13	1.91	3295.04	167.0	3.40	.18	3295.22	.00	1.21		6.00	20.00	3.00	0	.00
0	9.17	.00889					.00287	.03			1.36			3.00		
0	136.07	3293.21	1.84	3295.05	167.0	3.57	.20	3295.24	.00	1.21		6.00	20.00	3.00	0	.00
0	9.12	.00889					.00330	.03			1.36			3.00		
0	145.19	3293.29	1.76	3295.06	167.0	3.74	.22	3295.27	.00	1.21		6.00	20.00	3.00	0	.00
0	9.16	.00889					.00380	.03			1.36			3.00		
0	154.35	3293.37	1.70	3295.07	167.0	3.92	.24	3295.31	.00	1.21		6.00	20.00	3.00	0	.00
0	9.33	.00889					.00437	.04			1.36			3.00		
0	163.67	3293.45	1.63	3295.09	167.0	4.11	.26	3295.35	.00	1.21		6.00	20.00	3.00	0	.00
0	9.72	.00889					.00503	.05			1.36			3.00		

WATER SURFACE PROFILE LISTING

KINGMAN MASTER DRAINAGE PLAN

LINE Ak

Q10

O	STATION	INVERT ELEV	DEPTH OF FLOW	W.S. ELEV	Q	VEL	VEL HEAD	ENERGY GRD.EL.	SUPER ELEV	CRITICAL DEPTH		HGT/ DIA	BASE/ ID NO.	ZL	NO PIER	AVBPR
O	L/ELEM	SO					SF AVE	HF			NORM DEPTH			ZR		
0	173.39	3293.54	1.57	3295.11	167.0	4.32	.29	3295.40	.00	1.21		6.00	20.00	3.00	0	.00
0	10.56	.00889					.00579	.06			1.36			3.00		
0	183.95	3293.64	1.51	3295.14	167.0	4.53	.32	3295.46	.00	1.21		6.00	20.00	3.00	0	.00
0	12.49	.00889					.00667	.08			1.36			3.00		
0	196.44	3293.75	1.45	3295.19	167.0	4.75	.35	3295.54	.00	1.21		6.00	20.00	3.00	0	.00
0	18.72	.00889					.00769	.14			1.36			3.00		
0	215.16	3293.91	1.39	3295.30	167.0	4.98	.39	3295.69	.00	1.21		6.00	20.00	3.00	0	.00
0	30.16	.00889					.00856	.26			1.36			3.00		
0	245.32	3294.18	1.36	3295.54	167.0	5.11	.41	3295.94	.00	1.21		6.00	20.00	3.00	0	.00
0	6954.68	.00889					.00889	61.83			1.36			3.00		
0	7200.00	3356.00	1.36	3357.36	167.0	5.11	.41	3357.76	.00	1.21		6.00	20.00	3.00	0	.00
1																

WATER SURFACE PROFILE LISTING

KINGMAN MASTER DRAINAGE PLAN

LINE Am

Q10

O	STATION	INVERT ELEV	DEPTH OF FLOW	W.S. ELEV	Q	VEL	VEL HEAD	ENERGY GRD.EL.	SUPER ELEV	CRITICAL DEPTH		HGT/ DIA	BASE/ ID NO.	ZL	NO PIER	AVBPR
O	L/ELEM	SO					SF AVE	HF			NORM DEPTH			ZR		
0	.00	3310.50	2.50	3313.00	187.0	2.72	.11	3313.11	.00	1.30		5.00	20.00	3.00	0	.00
0	64.85	.00260					.00136	.09			2.05			3.00		
0	64.85	3310.67	2.41	3313.08	187.0	2.85	.13	3313.20	.00	1.30		5.00	20.00	3.00	0	.00
0	73.37	.00260					.00156	.11			2.05			3.00		
0	138.22	3310.86	2.32	3313.18	187.0	2.99	.14	3313.32	.00	1.30		5.00	20.00	3.00	0	.00
0	89.01	.00260					.00179	.16			2.05			3.00		
0	227.24	3311.09	2.23	3313.32	187.0	3.14	.15	3313.48	.00	1.30		5.00	20.00	3.00	0	.00
0	124.13	.00260					.00205	.25			2.05			3.00		
0	351.36	3311.41	2.15	3313.56	187.0	3.29	.17	3313.73	.00	1.30		5.00	20.00	3.00	0	.00
0	148.64	.00260					.00230	.34			2.05			3.00		
0	500.00	3311.80	2.09	3313.89	187.0	3.40	.18	3314.07	.00	1.30		5.00	20.00	3.00	0	.00
0	20.48	.00558					.00259	.05			1.65			3.00		
0	520.48	3311.91	2.01	3313.93	187.0	3.57	.20	3314.13	.00	1.30		5.00	20.00	3.00	0	.00
0	21.84	.00558					.00297	.06			1.65			3.00		
0	542.32	3312.04	1.94	3313.97	187.0	3.74	.22	3314.19	.00	1.30		5.00	20.00	3.00	0	.00
0	24.25	.00558					.00342	.08			1.65			3.00		
0	566.56	3312.17	1.86	3314.03	187.0	3.92	.24	3314.27	.00	1.30		5.00	20.00	3.00	0	.00
0	28.97	.00558					.00393	.11			1.65			3.00		
0	595.53	3312.33	1.79	3314.12	187.0	4.12	.26	3314.39	.00	1.30		5.00	20.00	3.00	0	.00
0	40.61	.00558					.00452	.18			1.65			3.00		
0	636.15	3312.56	1.72	3314.28	187.0	4.32	.29	3314.57	.00	1.30		5.00	20.00	3.00	0	.00
0	100.85	.00558					.00520	.52			1.65			3.00		
0	736.99	3313.12	1.65	3314.78	187.0	4.53	.32	3315.09	.00	1.30		5.00	20.00	3.00	0	.00
0	533.55	.00558					.00557	2.97			1.65			3.00		
0	1270.55	3316.10	1.65	3317.75	187.0	4.53	.32	3318.07	.00	1.30		5.00	20.00	3.00	0	.00
0	1381.45	.00558					.00558	7.71			1.65			3.00		
0	2652.00	3323.80	1.65	3325.45	187.0	4.53	.32	3325.77	.00	1.30		5.00	20.00	3.00	0	.00
0	14.54	.00825					.00601	.09			1.48			3.00		
0	2666.54	3323.92	1.59	3325.51	187.0	4.75	.35	3325.86	.00	1.30		5.00	20.00	3.00	0	.00
0	20.41	.00825					.00692	.14			1.48			3.00		
0	2686.96	3324.09	1.53	3325.61	187.0	4.99	.39	3326.00	.00	1.30		5.00	20.00	3.00	0	.00
0	41.37	.00825					.00784	.32			1.48			3.00		
0	2728.33	3324.43	1.48	3325.91	187.0	5.17	.42	3326.33	.00	1.30		5.00	20.00	3.00	0	.00
0	1595.67	.00825					.00827	13.19			1.48			3.00		

WATER SURFACE PROFILE LISTING

KINGMAN MASTER DRAINAGE PLAN

LINE Am

Q10

O	STATION	INVERT ELEV	DEPTH OF FLOW	W.S. ELEV	Q	VEL	VEL HEAD	ENERGY GRD.EL.	SUPER ELEV	CRITICAL DEPTH		HGT/ DIA	BASE/ ID NO.	ZL	NO PIER	AVBPR
O	L/ELEM	SO					SF AVE	HF			NORM DEPTH			ZR		
0	4324.00	3337.60	1.48	3339.08	187.0	5.17	.42	3339.50	.00	1.30		5.00	20.00	3.00	0	.00
0	836.00	.00825					.00827	6.91			1.48			3.00		
0	5160.00	3344.50	1.48	3345.98	187.0	5.17	.42	3346.40	.00	1.30		5.00	20.00	3.00	0	.00
0	836.00	.00825					.00827	6.91			1.48			3.00		
0	5996.00	3351.40	1.48	3352.88	187.0	5.17	.42	3353.29	.00	1.30		5.00	20.00	3.00	0	.00
0	3.45	.01383					.00890	.03			1.28			3.00		
0	5999.45	3351.45	1.42	3352.87	187.0	5.43	.46	3353.33	.00	1.30		5.00	20.00	3.00	0	.00
0	3.02	.01383					.01026	.03			1.28			3.00		
0	6002.46	3351.49	1.36	3352.85	187.0	5.69	.50	3353.36	.00	1.30		5.00	20.00	3.00	0	.00
0	1.69	.01383					.01183	.02			1.28			3.00		
0	6004.16	3351.51	1.31	3352.82	187.0	5.97	.55	3353.38	.00	1.30		5.00	20.00	3.00	0	.00
O	HYDRAULIC JUMP													3.00		
0	6004.16	3351.51	1.28	3352.79	187.0	6.15	.59	3353.38	.00	1.30		5.00	20.00	3.00	0	.00
0	1185.25	.01383					.01386	16.43			1.28			3.00		
0	7189.41	3367.91	1.28	3369.18	187.0	6.15	.59	3369.77	.00	1.30		5.00	20.00	3.00	0	.00
0	6.59	.01383					.01380	.09			1.28			3.00		
0	7196.00	3368.00	1.28	3369.28	187.0	6.13	.58	3369.86	.00	1.30		5.00	20.00	3.00	0	.00
0	235.82	.01375					.01375	3.24			1.28			3.00		
0	7431.82	3371.24	1.28	3372.52	187.0	6.13	.58	3373.11	.00	1.30		5.00	20.00	3.00	0	.00
0	4.18	.01375					.01400	.06			1.28			3.00		
0	7436.00	3371.30	1.27	3372.57	187.0	6.21	.60	3373.17	.00	1.30		5.00	20.00	3.00	0	.00
0	461.27	.01422					.01424	6.57			1.27			3.00		
0	7897.27	3377.86	1.27	3379.13	187.0	6.21	.60	3379.73	.00	1.30		5.00	20.00	3.00	0	.00
0	2.73	.01422					.01356	.04			1.27			3.00		
0	7900.00	3377.90	1.30	3379.20	187.0	6.00	.56	3379.76	.00	1.30		5.00	20.00	3.00	0	.00
1																

WATER SURFACE PROFILE LISTING

KINGMAN MASTER DRAINAGE PLAN

LINE An

Q10

0 STATION	INVERT ELEV	DEPTH OF FLOW	W.S. ELEV	Q	VEL	VEL HEAD	ENERGY GRD.EL.	SUPER ELEV	CRITICAL DEPTH		HGT/ DIA	BASE/ ID NO.	ZL	NO PIER	AVBPR
0 L/ELEM	SO					SF AVE	HF			NORM DEPTH			ZR		
0 .00	3316.70	4.60	3321.30	1283.0	3.78	.22	3321.52	.00	2.33		7.00	60.00	3.00	0	.00
						.00105	.04			2.77			3.00		
0 34.20	.00571														
0 34.20	3316.90	4.42	3321.31	1283.0	3.96	.24	3321.56	.00	2.33		7.00	60.00	3.00	0	.00
						.00121	.04			2.77			3.00		
0 33.52	.00571														
0 67.72	3317.09	4.24	3321.33	1283.0	4.16	.27	3321.60	.00	2.33		7.00	60.00	3.00	0	.00
						.00140	.05			2.77			3.00		
0 32.98	.00571														
0 100.70	3317.27	4.07	3321.35	1283.0	4.36	.30	3321.64	.00	2.33		7.00	60.00	3.00	0	.00
						.00161	.05			2.77			3.00		
0 32.59	.00571														
0 133.30	3317.46	3.91	3321.37	1283.0	4.57	.33	3321.70	.00	2.33		7.00	60.00	3.00	0	.00
						.00186	.06			2.77			3.00		
0 32.42	.00571														
0 165.72	3317.65	3.75	3321.40	1283.0	4.80	.36	3321.76	.00	2.33		7.00	60.00	3.00	0	.00
						.00215	.07			2.77			3.00		
0 32.54	.00571														
0 198.25	3317.83	3.60	3321.43	1283.0	5.03	.39	3321.83	.00	2.33		7.00	60.00	3.00	0	.00
						.00248	.08			2.77			3.00		
0 33.08	.00571														
0 231.33	3318.02	3.46	3321.48	1283.0	5.28	.43	3321.91	.00	2.33		7.00	60.00	3.00	0	.00
						.00286	.10			2.77			3.00		
0 34.29	.00571														
0 265.62	3318.22	3.32	3321.53	1283.0	5.53	.48	3322.01	.00	2.33		7.00	60.00	3.00	0	.00
						.00331	.12			2.77			3.00		
0 36.69	.00571														
0 302.31	3318.43	3.18	3321.61	1283.0	5.80	.52	3322.13	.00	2.33		7.00	60.00	3.00	0	.00
						.00382	.16			2.77			3.00		
0 41.54	.00571														
0 343.86	3318.66	3.05	3321.71	1283.0	6.09	.58	3322.29	.00	2.33		7.00	60.00	3.00	0	.00
						.00442	.23			2.77			3.00		
0 52.96	.00571														
0 396.81	3318.97	2.92	3321.89	1283.0	6.38	.63	3322.52	.00	2.33		7.00	60.00	3.00	0	.00
						.00511	.50			2.77			3.00		
0 96.83	.00571														
0 493.64	3319.52	2.80	3322.32	1283.0	6.70	.70	3323.02	.00	2.33		7.00	60.00	3.00	0	.00
						.00560	.73			2.77			3.00		
0 130.70	.00571														
0 624.35	3320.27	2.77	3323.03	1283.0	6.79	.72	3323.75	.00	2.33		7.00	60.00	3.00	0	.00
						.00572	25.66			2.77			3.00		
0 4489.65	.00571														
0 5114.00	3345.90	2.77	3348.67	1283.0	6.79	.72	3349.38	.00	2.33		7.00	60.00	3.00	0	.00
						.00617	.05			2.25			3.00		
0 8.09	.01158														
0 5122.09	3345.99	2.65	3348.65	1283.0	7.12	.79	3349.43	.00	2.33		7.00	60.00	3.00	0	.00
						.00714	.05			2.25			3.00		
0 7.27	.01158														
0 5129.36	3346.08	2.54	3348.62	1283.0	7.46	.87	3349.49	.00	2.33		7.00	60.00	3.00	0	.00
						.00827	.05			2.25			3.00		
0 6.09	.01158														

WATER SURFACE PROFILE LISTING

KINGMAN MASTER DRAINAGE PLAN

LINE An

Q10

O	STATION	INVERT ELEV	DEPTH OF FLOW	W.S. ELEV	Q	VEL	VEL HEAD	ENERGY GRD.EL.	SUPER ELEV	CRITICAL DEPTH		HGT/ DIA	BASE/ ID NO.	ZL	NO PIER	AVBPR
O	L/ELEM	SO					SF AVE	HF			NORM DEPTH			ZR		
0	5135.45	3346.15	2.43	3348.58	1283.0	7.83	.95	3349.54	.00	2.33		7.00	60.00	3.00	0	.00
0	1.86	.01158					.00908	.02			2.25			3.00		
0	5137.30	3346.17	2.40	3348.57	1283.0	7.95	.98	3349.55	.00	2.33		7.00	60.00	3.00	0	.00
OHYDRAULIC JUMP														3.00		
0	5137.30	3346.17	2.25	3348.42	1283.0	8.53	1.13	3349.55	.00	2.33		7.00	60.00	3.00	0	.00
0	963.89	.01158					.01159	11.17			2.25			3.00		
0	6101.20	3357.33	2.25	3359.58	1283.0	8.53	1.13	3360.71	.00	2.33		7.00	60.00	3.00	0	.00
0	14.80	.01158					.01196	.18			2.25			3.00		
0	6116.00	3357.50	2.21	3359.71	1283.0	8.71	1.18	3360.89	.00	2.33		7.00	60.00	3.00	0	.00
0	.00	.01158					.01234	.00			2.25			3.00		
0	6116.00	3357.50	2.21	3359.71	1283.0	8.71	1.18	3360.89	.00	2.33		7.00	60.00	3.00	0	.00
0	2327.97	.01232					.01234	28.72			2.21			3.00		
0	8443.97	3386.18	2.21	3388.39	1283.0	8.71	1.18	3389.57	.00	2.33		7.00	60.00	3.00	0	.00
0	19.56	.01232					.01219	.24			2.21			3.00		
0	8463.53	3386.42	2.23	3388.65	1283.0	8.64	1.16	3389.81	.00	2.33		7.00	60.00	3.00	0	.00
0	6.47	.01232					.01121	.07			2.21			3.00		
0	8470.00	3386.50	2.33	3388.83	1283.0	8.24	1.05	3389.88	.00	2.33		7.00	60.00	3.00	0	.00
OJUNCT STR		.19995					.06588	.07						3.00		
0	8471.00	3386.70	3.20	3389.90	840.0	3.77	.22	3390.12	.00	1.77		7.00	60.00	3.00	0	.00
0	12.27	.01053					.00160	.02			1.81			3.00		
0	8483.27	3386.83	3.07	3389.90	840.0	3.95	.24	3390.14	.00	1.77		7.00	60.00	3.00	0	.00
0	11.81	.01053					.00185	.02			1.81			3.00		
0	8495.07	3386.95	2.94	3389.90	840.0	4.15	.27	3390.16	.00	1.77		7.00	60.00	3.00	0	.00
0	11.36	.01053					.00214	.02			1.81			3.00		
0	8506.43	3387.07	2.82	3389.89	840.0	4.35	.29	3390.19	.00	1.77		7.00	60.00	3.00	0	.00
0	10.93	.01053					.00247	.03			1.81			3.00		
0	8517.37	3387.19	2.70	3389.89	840.0	4.56	.32	3390.22	.00	1.77		7.00	60.00	3.00	0	.00
0	10.52	.01053					.00286	.03			1.81			3.00		
0	8527.89	3387.30	2.59	3389.89	840.0	4.78	.36	3390.25	.00	1.77		7.00	60.00	3.00	0	.00
0	10.14	.01053					.00331	.03			1.81			3.00		
0	8538.03	3387.41	2.48	3389.89	840.0	5.02	.39	3390.28	.00	1.77		7.00	60.00	3.00	0	.00
0	9.78	.01053					.00384	.04			1.81			3.00		
0	8547.81	3387.51	2.38	3389.89	840.0	5.26	.43	3390.32	.00	1.77		7.00	60.00	3.00	0	.00
0	9.45	.01053					.00445	.04			1.81			3.00		

WATER SURFACE PROFILE LISTING

KINGMAN MASTER DRAINAGE PLAN

LINE An

Q10

O STATION / O L/ELEM	INVERT ELEV / SO	DEPTH OF FLOW	W.S. ELEV	Q	VEL	VEL HEAD / SF AVE	ENERGY GRD.EL. / HF	SUPER ELEV	CRITICAL DEPTH / NORM DEPTH	HGT/ DIA / ZR	BASE/ ID NO.	ZL	NO PIER	AVBPR
0 8557.26	3387.61	2.28	3389.89	840.0	5.52	.47	3390.36	.00	1.77	7.00	60.00	3.00	0	.00
0 9.17	.01053					.00516	.05		1.81			3.00		
0 8566.43	3387.70	2.18	3389.89	840.0	5.79	.52	3390.41	.00	1.77	7.00	60.00	3.00	0	.00
0 8.96	.01053					.00598	.05		1.81			3.00		
0 8575.39	3387.80	2.09	3389.89	840.0	6.07	.57	3390.46	.00	1.77	7.00	60.00	3.00	0	.00
0 8.88	.01053					.00694	.06		1.81			3.00		
0 8584.27	3387.89	2.00	3389.89	840.0	6.37	.63	3390.52	.00	1.77	7.00	60.00	3.00	0	.00
0 9.13	.01053					.00805	.07		1.81			3.00		
0 8593.41	3387.99	1.91	3389.90	840.0	6.68	.69	3390.60	.00	1.77	7.00	60.00	3.00	0	.00
0 10.92	.01053					.00934	.10		1.81			3.00		
0 8604.33	3388.10	1.83	3389.94	840.0	7.00	.76	3390.70	.00	1.77	7.00	60.00	3.00	0	.00
0 8.31	.01053					.01028	.09		1.81			3.00		
0 8612.64	3388.19	1.81	3390.00	840.0	7.11	.79	3390.78	.00	1.77	7.00	60.00	3.00	0	.00
0 1511.36	.01053					.01053	15.92		1.81			3.00		
0 10124.00	3404.10	1.81	3405.91	840.0	7.11	.79	3406.69	.00	1.77	7.00	60.00	3.00	0	.00
0 1.01	.01163					.01089	.01		1.75			3.00		
0 10125.01	3404.11	1.77	3405.88	840.0	7.26	.82	3406.70	.00	1.77	7.00	60.00	3.00	0	.00
OHYDRAULIC JUMP												3.00		
0 10125.01	3404.11	1.75	3405.87	840.0	7.34	.84	3406.70	.00	1.77	7.00	60.00	3.00	0	.00
0 1994.93	.01163					.01163	23.20		1.75			3.00		
0 12119.95	3427.31	1.75	3429.06	840.0	7.34	.84	3429.90	.00	1.77	7.00	60.00	3.00	0	.00
0 8.05	.01163					.01250	.10		1.75			3.00		
0 12128.00	3427.40	1.68	3429.08	840.0	7.67	.92	3430.00	.00	1.77	7.00	60.00	3.00	0	.00
0 1838.33	.01335					.01338	24.60		1.68			3.00		
0 13966.33	3451.95	1.68	3453.63	840.0	7.67	.92	3454.55	.00	1.77	7.00	60.00	3.00	0	.00
0 13.15	.01335					.01370	.18		1.68			3.00		
0 13979.49	3452.13	1.66	3453.79	840.0	7.79	.94	3454.73	.00	1.77	7.00	60.00	3.00	0	.00
0 12.38	.01335					.01515	.19		1.68			3.00		
0 13991.87	3452.29	1.59	3453.88	840.0	8.17	1.04	3454.92	.00	1.77	7.00	60.00	3.00	0	.00
0 8.13	.01335					.01761	.14		1.68			3.00		
0 14000.00	3452.40	1.52	3453.92	840.0	8.57	1.14	3455.06	.00	1.77	7.00	60.00	3.00	0	.00
0 1000.00	.01890					.01894	18.94		1.52			3.00		
0 15000.00	3471.30	1.52	3472.82	840.0	8.57	1.14	3473.96	.00	1.77	7.00	60.00	3.00	0	.00
0 1000.00	.01890					.01894	18.94		1.52			3.00		

WATER SURFACE PROFILE LISTING

KINGMAN MASTER DRAINAGE PLAN

LINE An

Q10

O	STATION	INVERT ELEV	DEPTH OF FLOW	W.S. ELEV	Q	VEL	VEL HEAD	ENERGY GRD.EL.	SUPER ELEV	CRITICAL DEPTH		HGT/ DIA	BASE/ ID NO.	ZL	NO PIER	AVBPR
O	L/ELEM	SO					SF AVE	HF			NORM DEPTH			ZR		
O	16000.00	3490.20	1.52	3491.72	840.0	8.57	1.14	3492.86	.00	1.77		7.00	60.00	3.00	0	.00
O	.00	.01890					.01894	.00			1.52			3.00		
O	16000.00	3490.20	1.52	3491.72	840.0	8.57	1.14	3492.86	.00	1.77		7.00	60.00	3.00	0	.00
O	954.38	.01890					.01894	18.07			1.52			3.00		
O	16954.38	3508.24	1.52	3509.76	840.0	8.57	1.14	3510.90	.00	1.77		7.00	60.00	3.00	0	.00
O	29.38	.01890					.01831	.54			1.52			3.00		
O	16983.75	3508.79	1.55	3510.34	840.0	8.38	1.09	3511.44	.00	1.77		7.00	60.00	3.00	0	.00
O	11.84	.01890					.01645	.19			1.52			3.00		
O	16995.59	3509.02	1.62	3510.64	840.0	7.99	.99	3511.63	.00	1.77		7.00	60.00	3.00	0	.00
O	3.57	.01890					.01416	.05			1.52			3.00		
O	16999.16	3509.08	1.69	3510.78	840.0	7.62	.90	3511.68	.00	1.77		7.00	60.00	3.00	0	.00
O	.84	.01890					.01218	.01			1.52			3.00		
O	17000.00	3509.10	1.77	3510.87	840.0	7.26	.82	3511.69	.00	1.77		7.00	60.00	3.00	0	.00
1																

WATER SURFACE PROFILE LISTING

KINGMAN MASTER DRAINAGE PLAN

Line Ao Bull Mountain

Q10

O STATION / O L/ELEM	INVERT ELEV / SO	DEPTH OF FLOW	W.S. ELEV	Q	VEL	VEL HEAD / SF AVE	ENERGY GRD.EL. / HF	SUPER ELEV	CRITICAL DEPTH / NORM DEPTH		HGT/ DIA	BASE/ ID NO.	ZL / ZR	NO PIER	AVBPR
0 .00	3350.00	4.00	3354.00	1538.0	4.69	.34	3354.34	.00	2.38		10.00	70.00	3.00	0	.00
0 11.20	.01338					.00186	.02			2.20			3.00		
0 11.20	3350.15	3.84	3353.99	1538.0	4.92	.38	3354.36	.00	2.38		10.00	70.00	3.00	0	.00
0 10.65	.01338					.00215	.02			2.20			3.00		
0 21.86	3350.29	3.68	3353.97	1538.0	5.16	.41	3354.39	.00	2.38		10.00	70.00	3.00	0	.00
0 10.10	.01338					.00248	.03			2.20			3.00		
0 31.96	3350.43	3.53	3353.96	1538.0	5.41	.45	3354.41	.00	2.38		10.00	70.00	3.00	0	.00
0 9.55	.01338					.00287	.03			2.20			3.00		
0 41.51	3350.56	3.38	3353.94	1538.0	5.67	.50	3354.44	.00	2.38		10.00	70.00	3.00	0	.00
0 8.98	.01338					.00332	.03			2.20			3.00		
0 50.49	3350.68	3.24	3353.92	1538.0	5.95	.55	3354.47	.00	2.38		10.00	70.00	3.00	0	.00
0 8.39	.01338					.00384	.03			2.20			3.00		
0 58.88	3350.79	3.11	3353.89	1538.0	6.24	.61	3354.50	.00	2.38		10.00	70.00	3.00	0	.00
0 7.77	.01338					.00445	.03			2.20			3.00		
0 66.65	3350.89	2.98	3353.87	1538.0	6.55	.67	3354.53	.00	2.38		10.00	70.00	3.00	0	.00
0 7.10	.01338					.00515	.04			2.20			3.00		
0 73.75	3350.99	2.85	3353.84	1538.0	6.87	.73	3354.57	.00	2.38		10.00	70.00	3.00	0	.00
0 6.33	.01338					.00597	.04			2.20			3.00		
0 80.08	3351.07	2.73	3353.80	1538.0	7.20	.81	3354.61	.00	2.38		10.00	70.00	3.00	0	.00
0 5.41	.01338					.00692	.04			2.20			3.00		
0 85.48	3351.14	2.62	3353.76	1538.0	7.55	.89	3354.65	.00	2.38		10.00	70.00	3.00	0	.00
0 1.98	.01338					.00765	.02			2.20			3.00		
0 87.46	3351.17	2.57	3353.74	1538.0	7.70	.92	3354.66	.00	2.38		10.00	70.00	3.00	0	.00
OHYDRAULIC JUMP													3.00		
0 87.46	3351.17	2.20	3353.37	1538.0	9.13	1.29	3354.66	.00	2.38		10.00	70.00	3.00	0	.00
0 5473.69	.01338					.01340	73.34			2.20			3.00		
0 5561.15	3424.41	2.20	3426.61	1538.0	9.13	1.29	3427.90	.00	2.38		10.00	70.00	3.00	0	.00
0 26.14	.01338					.01363	.36			2.20			3.00		
0 5587.29	3424.76	2.18	3426.94	1538.0	9.23	1.32	3428.26	.00	2.38		10.00	70.00	3.00	0	.00
0 24.07	.01338					.01499	.36			2.20			3.00		
0 5611.35	3425.08	2.08	3427.17	1538.0	9.68	1.46	3428.62	.00	2.38		10.00	70.00	3.00	0	.00
0 13.83	.01338					.01740	.24			2.20			3.00		
0 5625.19	3425.27	1.99	3427.26	1538.0	10.15	1.60	3428.86	.00	2.38		10.00	70.00	3.00	0	.00
0 10.80	.01338					.02022	.22			2.20			3.00		

WATER SURFACE PROFILE LISTING

KINGMAN MASTER DRAINAGE PLAN

Line Ao Bull Mountain

Q10

O STATION / O L/ELEM	INVERT ELEV / SO	DEPTH OF FLOW	W.S. ELEV	Q	VEL	VEL HEAD / SF AVE	ENERGY GRD.EL. / HF	SUPER ELEV	CRITICAL DEPTH / NORM DEPTH		HGT/ DIA	BASE/ ID NO.	ZL / ZR	NO PIER	AVBPR
0 5635.98	3425.41	1.91	3427.32	1538.0	10.65	1.76	3429.08	.00	2.38		10.00	70.00	3.00	0	.00
0 9.23	.01338					.02349	.22			2.20			3.00		
0 5645.21	3425.53	1.83	3427.36	1538.0	11.17	1.94	3429.30	.00	2.38		10.00	70.00	3.00	0	.00
0 8.21	.01338					.02731	.22			2.20			3.00		
0 5653.42	3425.64	1.75	3427.39	1538.0	11.71	2.13	3429.52	.00	2.38		10.00	70.00	3.00	0	.00
0 7.46	.01338					.03175	.24			2.20			3.00		
0 5660.88	3425.74	1.67	3427.41	1538.0	12.28	2.34	3429.76	.00	2.38		10.00	70.00	3.00	0	.00
0 6.85	.01338					.03693	.25			2.20			3.00		
0 5667.73	3425.84	1.60	3427.43	1538.0	12.88	2.58	3430.01	.00	2.38		10.00	70.00	3.00	0	.00
0 6.35	.01338					.04296	.27			2.20			3.00		
0 5674.08	3425.92	1.53	3427.45	1538.0	13.51	2.84	3430.28	.00	2.38		10.00	70.00	3.00	0	.00
0 5.92	.01338					.05000	.30			2.20			3.00		
0 5680.00	3426.00	1.46	3427.46	1538.0	14.17	3.12	3430.58	.00	2.38		10.00	70.00	3.00	0	.00
OTRANS STR	.02500					.01315	.26						3.00		
0 5700.00	3426.50	1.42	3427.92	1538.0	13.77	2.95	3430.86	.00	2.29		10.00	76.00	2.00	0	.00
0 WALL EXIT													2.00		
0 5700.00	3426.50	1.62	3428.12	1538.0	13.52	2.84	3430.97	.00	2.47		5.00	76.00	.00	6	1.00
0 WALL EXIT													.00		
0 5700.00	3426.50	1.62	3428.12	1538.0	13.52	2.84	3430.97	.00	2.47		5.00	76.00	.00	6	1.00
0 19.58	.01875					.01174	.23			1.41			.00		
0 5719.58	3426.87	1.68	3428.55	1538.0	13.05	2.65	3431.20	.00	2.47		5.00	76.00	.00	6	1.00
0 18.92	.01875					.01037	.20			1.41			.00		
0 5738.50	3427.22	1.77	3428.99	1538.0	12.44	2.41	3431.39	.00	2.47		5.00	76.00	.00	6	1.00
0 13.60	.01875					.00900	.12			1.41			.00		
0 5752.10	3427.48	1.85	3429.33	1538.0	11.86	2.19	3431.52	.00	2.47		5.00	76.00	.00	6	1.00
0 9.92	.01875					.00781	.08			1.41			.00		
0 5762.01	3427.66	1.94	3429.61	1538.0	11.31	1.99	3431.59	.00	2.47		5.00	76.00	.00	6	1.00
0 7.18	.01875					.00678	.05			1.41			.00		
0 5769.20	3427.80	2.04	3429.83	1538.0	10.79	1.81	3431.64	.00	2.47		5.00	76.00	.00	6	1.00
0 5.05	.01875					.00589	.03			1.41			.00		
0 5774.25	3427.89	2.14	3430.03	1538.0	10.28	1.64	3431.67	.00	2.47		5.00	76.00	.00	6	1.00
0 3.31	.01875					.00512	.02			1.41			.00		
0 5777.56	3427.95	2.24	3430.20	1538.0	9.80	1.49	3431.69	.00	2.47		5.00	76.00	.00	6	1.00
0 1.85	.01875					.00446	.01			1.41			.00		

WATER SURFACE PROFILE LISTING

KINGMAN MASTER DRAINAGE PLAN

Line Ao Bull Mountain

Q10

O	STATION	INVERT ELEV	DEPTH OF FLOW	W.S. ELEV	Q	VEL	VEL HEAD	ENERGY GRD.EL.	SUPER ELEV	CRITICAL DEPTH		HGT/ DIA	BASE/ ID NO.	ZL	NO PIER	AVBPR
O	L/ELEM	SO					SF AVE	HF			NORM DEPTH			ZR		
0	5779.41	3427.99	2.35	3430.34	1538.0	9.35	1.36	3431.70	.00	2.47		5.00	76.00	.00	6	1.00
0	.59	.01875					.00388	.00			1.41			.00		
0	5780.00	3428.00	2.47	3430.47	1538.0	8.91	1.23	3431.70	.00	2.47		5.00	76.00	.00	6	1.00
0	WALL ENTRANCE													.00		
0	5780.00	3428.00	3.48	3431.48	1538.0	5.33	.44	3431.92	.00	2.29		10.00	76.00	2.00	0	.00
0	5780.00	3428.00	2.23	3430.23	1538.0	21.21	7.00	3437.23	.00	4.10		10.00	28.00	2.00	0	.00
0	26.16	.01936					.01937	.51			2.23			2.00		
0	5806.16	3428.51	2.23	3430.74	1538.0	21.21	7.00	3437.73	.00	4.10		10.00	28.00	2.00	0	.00
0	422.41	.01936					.01850	7.81			2.23			2.00		
0	6228.57	3436.68	2.30	3438.98	1538.0	20.56	6.57	3445.55	.00	4.10		10.00	28.00	2.00	0	.00
0	171.43	.01936					.01644	2.82			2.23			2.00		
0	6400.00	3440.00	2.39	3442.39	1538.0	14.35	3.20	3445.59	.00	3.38		10.00	40.00	2.00	0	.00
0	320.85	.01375					.01375	4.41			2.39			2.00		
0	6720.85	3444.41	2.39	3446.80	1538.0	14.35	3.20	3450.01	.00	3.38		10.00	40.00	2.00	0	.00
0	202.53	.01375					.01363	2.76			2.39			2.00		
0	6923.38	3447.20	2.41	3449.60	1538.0	14.27	3.16	3452.77	.00	3.38		10.00	40.00	2.00	0	.00
0	156.26	.01375					.01259	1.97			2.39			2.00		
0	7079.63	3449.34	2.51	3451.86	1538.0	13.60	2.88	3454.73	.00	3.38		10.00	40.00	2.00	0	.00
0	52.69	.01375					.01087	.57			2.39			2.00		
0	7132.33	3450.07	2.62	3452.69	1538.0	12.97	2.61	3455.31	.00	3.38		10.00	40.00	2.00	0	.00
0	28.37	.01375					.00940	.27			2.39			2.00		
0	7160.70	3450.46	2.74	3453.19	1538.0	12.37	2.38	3455.57	.00	3.38		10.00	40.00	2.00	0	.00
0	17.32	.01375					.00812	.14			2.39			2.00		
0	7178.02	3450.70	2.85	3453.55	1538.0	11.79	2.16	3455.71	.00	3.38		10.00	40.00	2.00	0	.00
0	10.88	.01375					.00702	.08			2.39			2.00		
0	7188.90	3450.85	2.98	3453.82	1538.0	11.24	1.96	3455.79	.00	3.38		10.00	40.00	2.00	0	.00
0	6.59	.01375					.00608	.04			2.39			2.00		
0	7195.49	3450.94	3.11	3454.04	1538.0	10.72	1.79	3455.83	.00	3.38		10.00	40.00	2.00	0	.00
0	3.46	.01375					.00526	.02			2.39			2.00		
0	7198.96	3450.99	3.24	3454.22	1538.0	10.22	1.62	3455.85	.00	3.38		10.00	40.00	2.00	0	.00
0	1.04	.01375					.00455	.00			2.39			2.00		
0	7200.00	3451.00	3.38	3454.38	1538.0	9.74	1.47	3455.85	.00	3.38		10.00	40.00	2.00	0	.00
0	JUNCT STR	.05000					.06437	.64						2.00		
0	7210.00	3451.50	4.83	3456.33	1040.0	5.42	.46	3456.79	.00	3.11		8.00	30.00	2.00	0	.00

WATER SURFACE PROFILE LISTING

KINGMAN MASTER DRAINAGE PLAN

Line Ao Bull Mountain

Q10

O STATION / O L/ELEM	INVERT ELEV / SO	DEPTH OF FLOW	W.S. ELEV	Q	VEL	VEL HEAD / SF AVE	ENERGY GRD.EL. / HF	SUPER ELEV	CRITICAL DEPTH / NORM DEPTH	HGT/ DIA	BASE/ ID NO.	ZL / ZR	NO PIER	AVBPR
0 6.71	.02133					.00099	.01		1.97			2.00		
0 7216.71	3451.64	4.65	3456.29	1040.0	5.69	.50	3456.80	.00	3.11	8.00	30.00	2.00	0	.00
0 2.42	.02133					.00109	.00		1.97			2.00		
0 7219.13	3451.69	4.58	3456.28	1040.0	5.79	.52	3456.80	.00	3.11	8.00	30.00	2.00	0	.00
OHYDRAULIC JUMP												2.00		
0 7219.13	3451.69	1.97	3453.66	1040.0	15.58	3.77	3457.44	.00	3.11	8.00	30.00	2.00	0	.00
0 2316.15	.02133					.02133	49.41		1.97			2.00		
0 9535.29	3501.09	1.97	3503.06	1040.0	15.58	3.77	3506.83	.00	3.11	8.00	30.00	2.00	0	.00
0 183.63	.02133					.02118	3.89		1.97			2.00		
0 9718.91	3505.01	1.98	3506.98	1040.0	15.51	3.74	3510.72	.00	3.11	8.00	30.00	2.00	0	.00
0 147.41	.02133					.01960	2.89		1.97			2.00		
0 9866.32	3508.15	2.06	3510.21	1040.0	14.79	3.40	3513.61	.00	3.11	8.00	30.00	2.00	0	.00
0 50.17	.02133					.01695	.85		1.97			2.00		
0 9916.49	3509.22	2.15	3511.37	1040.0	14.10	3.09	3514.46	.00	3.11	8.00	30.00	2.00	0	.00
0 28.20	.02133					.01466	.41		1.97			2.00		
0 9944.69	3509.82	2.24	3512.06	1040.0	13.44	2.81	3514.87	.00	3.11	8.00	30.00	2.00	0	.00
0 18.39	.02133					.01268	.23		1.97			2.00		
0 9963.07	3510.21	2.34	3512.55	1040.0	12.82	2.55	3515.11	.00	3.11	8.00	30.00	2.00	0	.00
0 12.76	.02133					.01098	.14		1.97			2.00		
0 9975.83	3510.48	2.44	3512.92	1040.0	12.22	2.32	3515.25	.00	3.11	8.00	30.00	2.00	0	.00
0 9.06	.02133					.00951	.09		1.97			2.00		
0 9984.89	3510.68	2.54	3513.22	1040.0	11.65	2.11	3515.33	.00	3.11	8.00	30.00	2.00	0	.00
0 6.41	.02133					.00823	.05		1.97			2.00		
0 9991.30	3510.81	2.65	3513.47	1040.0	11.11	1.92	3515.38	.00	3.11	8.00	30.00	2.00	0	.00
0 4.40	.02133					.00714	.03		1.97			2.00		
0 9995.71	3510.91	2.76	3513.67	1040.0	10.59	1.74	3515.42	.00	3.11	8.00	30.00	2.00	0	.00
0 2.80	.02133					.00619	.02		1.97			2.00		
0 9998.51	3510.97	2.88	3513.85	1040.0	10.10	1.59	3515.43	.00	3.11	8.00	30.00	2.00	0	.00
0 1.49	.02133					.00536	.01		1.97			2.00		
0 10000.00	3511.00	3.00	3514.00	1040.0	9.63	1.44	3515.44	.00	3.11	8.00	30.00	2.00	0	.00

WATER SURFACE PROFILE LISTING

KINGMAN MASTER DRAINAGE PLAN
LINE Ap (GOLF COURSE)
Q10

O	STATION	INVERT ELEV	DEPTH OF FLOW	W.S. ELEV	Q	VEL	VEL HEAD	ENERGY GRD.EL.	SUPER ELEV	CRITICAL DEPTH		HGT/ DIA	BASE/ ID NO.	ZL	NO PIER	AVBPR
O	L/ELEM	SO					SF AVE	HF			NORM DEPTH			ZR		
0	.00	3420.00	4.00	3424.00	189.0	2.15	.07	3424.07	.00	1.84		6.00	10.00	3.00	0	.00
0	10.58	.01143					.00059	.01			1.88			3.00		
0	10.58	3420.12	3.88	3424.00	189.0	2.25	.08	3424.08	.00	1.84		6.00	10.00	3.00	0	.00
0	10.30	.01143					.00068	.01			1.88			3.00		
0	20.88	3420.24	3.76	3424.00	189.0	2.36	.09	3424.08	.00	1.84		6.00	10.00	3.00	0	.00
0	10.03	.01143					.00077	.01			1.88			3.00		
0	30.91	3420.35	3.64	3424.00	189.0	2.48	.10	3424.09	.00	1.84		6.00	10.00	3.00	0	.00
0	117.75	3421.35	2.64	3423.99	189.0	3.99	.25	3424.24	.00	1.84		6.00	10.00	3.00	0	.00
0	7.49	.01143					.00324	.02			1.88			3.00		
0	125.24	3421.43	2.56	3423.99	189.0	4.19	.27	3424.26	.00	1.84		6.00	10.00	3.00	0	.00
0	7.31	.01143					.00369	.03			1.88			3.00		
0	132.55	3421.51	2.47	3423.99	189.0	4.39	.30	3424.29	.00	1.84		6.00	10.00	3.00	0	.00
0	7.14	.01143					.00421	.03			1.88			3.00		
0	139.69	3421.60	2.39	3423.99	189.0	4.60	.33	3424.32	.00	1.84		6.00	10.00	3.00	0	.00
0	6.99	.01143					.00480	.03			1.88			3.00		
0	9.77	.01143					.00088	.01			1.88			3.00		
0	40.67	3420.46	3.53	3424.00	189.0	2.60	.10	3424.10	.00	1.84		6.00	10.00	3.00	0	.00
0	9.51	.01143					.00100	.01			1.88			3.00		
0	50.18	3420.57	3.42	3424.00	189.0	2.73	.12	3424.11	.00	1.84		6.00	10.00	3.00	0	.00
0	9.26	.01143					.00114	.01			1.88			3.00		
0	59.44	3420.68	3.31	3423.99	189.0	2.86	.13	3424.12	.00	1.84		6.00	10.00	3.00	0	.00
0	9.01	.01143					.00130	.01			1.88			3.00		
0	68.45	3420.78	3.21	3423.99	189.0	3.00	.14	3424.13	.00	1.84		6.00	10.00	3.00	0	.00
0	8.77	.01143					.00148	.01			1.88			3.00		
0	77.23	3420.88	3.11	3423.99	189.0	3.14	.15	3424.15	.00	1.84		6.00	10.00	3.00	0	.00
0	8.54	.01143					.00168	.01			1.88			3.00		
0	85.77	3420.98	3.01	3423.99	189.0	3.30	.17	3424.16	.00	1.84		6.00	10.00	3.00	0	.00
0	8.32	.01143					.00192	.02			1.88			3.00		
0	94.08	3421.08	2.91	3423.99	189.0	3.46	.19	3424.18	.00	1.84		6.00	10.00	3.00	0	.00
0	8.10	.01143					.00218	.02			1.88			3.00		
0	102.18	3421.17	2.82	3423.99	189.0	3.63	.20	3424.19	.00	1.84		6.00	10.00	3.00	0	.00
0	7.89	.01143					.00249	.02			1.88			3.00		
0	110.07	3421.26	2.73	3423.99	189.0	3.80	.23	3424.21	.00	1.84		6.00	10.00	3.00	0	.00
0	7.68	.01143					.00284	.02			1.88			3.00		

WATER SURFACE PROFILE LISTING

KINGMAN MASTER DRAINAGE PLAN
LINE Ap (GOLF COURSE)
Q10

O	STATION	INVERT ELEV	DEPTH OF FLOW	W.S. ELEV	Q	VEL	VEL HEAD	ENERGY GRD.EL.	SUPER ELEV	CRITICAL DEPTH		HGT/ DIA	BASE/ ID NO.	ZL	NO PIER	AVBPR
O	L/ELEM	SO					SF AVE	HF			NORM DEPTH			ZR		
0	146.68	3421.68	2.31	3423.99	189.0	4.83	.36	3424.35	.00	1.84		6.00	10.00	3.00	0	.00
0	6.87	.01143					.00548	.04			1.88			3.00		
0	153.55	3421.75	2.23	3423.99	189.0	5.06	.40	3424.39	.00	1.84		6.00	10.00	3.00	0	.00
0	6.78	.01143					.00626	.04			1.88			3.00		
0	160.33	3421.83	2.16	3423.99	189.0	5.31	.44	3424.43	.00	1.84		6.00	10.00	3.00	0	.00
0	6.77	.01143					.00714	.05			1.88			3.00		
0	167.09	3421.91	2.09	3424.00	189.0	5.57	.48	3424.48	.00	1.84		6.00	10.00	3.00	0	.00
0	6.90	.01143					.00816	.06			1.88			3.00		
0	173.99	3421.99	2.02	3424.00	189.0	5.84	.53	3424.53	.00	1.84		6.00	10.00	3.00	0	.00
0	7.45	.01143					.00932	.07			1.88			3.00		
0	181.44	3422.07	1.95	3424.02	189.0	6.13	.58	3424.60	.00	1.84		6.00	10.00	3.00	0	.00
0	10.83	.01143					.01065	.12			1.88			3.00		
0	192.28	3422.20	1.88	3424.08	189.0	6.43	.64	3424.72	.00	1.84		6.00	10.00	3.00	0	.00
0	6.02	.01143					.01139	.07			1.88			3.00		
0	198.29	3422.27	1.88	3424.14	189.0	6.44	.64	3424.79	.00	1.84		6.00	10.00	3.00	0	.00
0	3301.71	.01143					.01143	37.73			1.88			3.00		
0	3500.00	3460.00	1.88	3461.88	189.0	6.44	.64	3462.52	.00	1.84		6.00	10.00	3.00	0	.00
1																

WATER SURFACE PROFILE LISTING

KINGMAN MASTER DRAINAGE PLAN

RAILWAY 50 - 150

Q10

O	STATION	INVERT ELEV	DEPTH OF FLOW	W.S. ELEV	Q	VEL	VEL HEAD	ENERGY GRD.EL.	SUPER ELEV	CRITICAL DEPTH	NORM DEPTH	HGT/ DIA	BASE/ ID NO.	ZL	NO PIER	AVBPR
O	L/ELEM	SO					SF AVE	HF						ZR		
0	.00	3282.00	6.00	3288.00	4226.0	4.76	.35	3288.35	.00	3.12		10.00	130.00	3.00	0	.00
0	26.39	.00922					.00108	.03			3.13			3.00		
0	26.39	3282.24	5.75	3287.99	4226.0	4.99	.39	3288.38	.00	3.12		10.00	130.00	3.00	0	.00
0	25.32	.00922					.00125	.03			3.13			3.00		
0	51.71	3282.48	5.51	3287.99	4226.0	5.23	.43	3288.41	.00	3.12		10.00	130.00	3.00	0	.00
0	24.29	.00922					.00145	.04			3.13			3.00		
0	76.00	3282.70	5.28	3287.98	4226.0	5.49	.47	3288.45	.00	3.12		10.00	130.00	3.00	0	.00
0	23.28	.00922					.00168	.04			3.13			3.00		
0	99.28	3282.92	5.06	3287.97	4226.0	5.76	.52	3288.49	.00	3.12		10.00	130.00	3.00	0	.00
0	22.31	.00922					.00195	.04			3.13			3.00		
0	121.59	3283.12	4.84	3287.96	4226.0	6.04	.57	3288.53	.00	3.12		10.00	130.00	3.00	0	.00
0	21.36	.00922					.00226	.05			3.13			3.00		
0	142.95	3283.32	4.64	3287.95	4226.0	6.33	.62	3288.58	.00	3.12		10.00	130.00	3.00	0	.00
0	20.45	.00922					.00262	.05			3.13			3.00		
0	163.41	3283.51	4.44	3287.95	4226.0	6.64	.69	3288.63	.00	3.12		10.00	130.00	3.00	0	.00
0	19.57	.00922					.00304	.06			3.13			3.00		
0	182.98	3283.69	4.25	3287.94	4226.0	6.97	.75	3288.69	.00	3.12		10.00	130.00	3.00	0	.00
0	18.72	.00922					.00352	.07			3.13			3.00		
0	201.70	3283.86	4.07	3287.93	4226.0	7.31	.83	3288.76	.00	3.12		10.00	130.00	3.00	0	.00
0	17.90	.00922					.00409	.07			3.13			3.00		
0	219.60	3284.03	3.89	3287.92	4226.0	7.66	.91	3288.83	.00	3.12		10.00	130.00	3.00	0	.00
0	17.12	.00922					.00475	.08			3.13			3.00		
0	236.71	3284.18	3.72	3287.91	4226.0	8.04	1.00	3288.91	.00	3.12		10.00	130.00	3.00	0	.00
0	16.37	.00922					.00552	.09			3.13			3.00		
0	253.08	3284.33	3.56	3287.90	4226.0	8.43	1.10	3289.00	.00	3.12		10.00	130.00	3.00	0	.00
0	15.68	.00922					.00641	.10			3.13			3.00		
0	268.76	3284.48	3.41	3287.89	4226.0	8.84	1.22	3289.10	.00	3.12		10.00	130.00	3.00	0	.00
0	15.10	.00922					.00745	.11			3.13			3.00		
0	283.86	3284.62	3.26	3287.88	4226.0	9.27	1.34	3289.21	.00	3.12		10.00	130.00	3.00	0	.00
0	14.21	.00922					.00862	.12			3.13			3.00		
0	298.07	3284.75	3.13	3287.88	4226.0	9.70	1.46	3289.34	.00	3.12		10.00	130.00	3.00	0	.00
0	5881.93	.00922					.00923	54.31			3.13			3.00		
0	6180.00	3339.00	3.13	3342.13	4226.0	9.70	1.46	3343.59	.00	3.12		10.00	130.00	3.00	0	.00
O	JUNCT STR	.10000					.06837	1.37						3.00		

WATER SURFACE PROFILE LISTING

KINGMAN MASTER DRAINAGE PLAN

RAILWAY 50 - 150

Q10

O STATION / O L/ELEM	INVERT ELEV / SO	DEPTH OF FLOW	W.S. ELEV	Q	VEL	VEL HEAD / SF AVE	ENERGY GRD.EL. / HF	SUPER ELEV	CRITICAL DEPTH / NORM DEPTH		HGT/ DIA	BASE/ ID NO.	ZL / ZR	NO PIER	AVBPR
0 6200.00	3341.00	3.64	3344.64	3156.0	6.15	.59	3345.23	.00	2.58		10.00	130.00	3.00	0	.00
0 4.56	.02500					.00332	.02			1.96			3.00		
0 6204.56	3341.11	3.48	3344.60	3156.0	6.45	.65	3345.24	.00	2.58		10.00	130.00	3.00	0	.00
0 4.10	.02500					.00386	.02			1.96			3.00		
0 6208.66	3341.22	3.33	3344.55	3156.0	6.77	.71	3345.26	.00	2.58		10.00	130.00	3.00	0	.00
0 3.61	.02500					.00449	.02			1.96			3.00		
0 6212.27	3341.31	3.19	3344.49	3156.0	7.10	.78	3345.28	.00	2.58		10.00	130.00	3.00	0	.00
0 3.08	.02500					.00522	.02			1.96			3.00		
0 6215.34	3341.38	3.05	3344.43	3156.0	7.44	.86	3345.29	.00	2.58		10.00	130.00	3.00	0	.00
0 2.50	.02500					.00607	.02			1.96			3.00		
0 6217.84	3341.45	2.91	3344.36	3156.0	7.81	.95	3345.31	.00	2.58		10.00	130.00	3.00	0	.00
0 1.85	.02500					.00706	.01			1.96			3.00		
0 6219.69	3341.49	2.79	3344.28	3156.0	8.19	1.04	3345.32	.00	2.58		10.00	130.00	3.00	0	.00
0 .31	.02500					.00773	.00			1.96			3.00		
0 6220.00	3341.50	2.76	3344.26	3156.0	8.27	1.06	3345.32	.00	2.58		10.00	130.00	3.00	0	.00
0 6220.00	3341.50	3.04	3344.54	3156.0	9.51	1.40	3345.95	.00	3.04		10.00	100.00	3.00	0	.00
0 2.24	.00481					.00875	.02			3.70			3.00		
0 6222.24	3341.51	3.18	3344.69	3156.0	9.06	1.28	3345.97	.00	3.04		10.00	100.00	3.00	0	.00
0 9.57	.00481					.00754	.07			3.70			3.00		
0 6231.81	3341.56	3.32	3344.88	3156.0	8.64	1.16	3346.04	.00	3.04		10.00	100.00	3.00	0	.00
0 25.22	.00481					.00650	.16			3.70			3.00		
0 6257.03	3341.68	3.47	3345.15	3156.0	8.24	1.06	3346.20	.00	3.04		10.00	100.00	3.00	0	.00
0 73.66	.00481					.00560	.41			3.70			3.00		
0 6330.68	3342.03	3.62	3345.66	3156.0	7.86	.96	3346.62	.00	3.04		10.00	100.00	3.00	0	.00
0 185.58	.00481					.00500	.93			3.70			3.00		
0 6516.26	3342.93	3.70	3346.63	3156.0	7.67	.91	3347.54	.00	3.04		10.00	100.00	3.00	0	.00
0 6663.74	.00481					.00482	32.09			3.70			3.00		
0 13180.00	3375.00	3.70	3378.70	3156.0	7.67	.91	3379.62	.00	3.04		10.00	100.00	3.00	0	.00
OJUNCT STR	.10000					.04017	.80						3.00		
0 13200.00	3377.00	3.06	3380.06	1614.0	4.83	.36	3380.42	.00	1.97		10.00	100.00	3.00	0	.00
0 4.26	.02500					.00261	.01			1.53			3.00		
0 13204.26	3377.11	2.93	3380.03	1614.0	5.07	.40	3380.43	.00	1.97		10.00	100.00	3.00	0	.00
0 3.94	.02500					.00303	.01			1.53			3.00		
0 13208.20	3377.20	2.80	3380.01	1614.0	5.32	.44	3380.44	.00	1.97		10.00	100.00	3.00	0	.00

WATER SURFACE PROFILE LISTING

KINGMAN MASTER DRAINAGE PLAN

RAILWAY 50 - 150

Q10

O STATION / O L/ELEM	INVERT ELEV / SO	DEPTH OF FLOW	W.S. ELEV	Q	VEL	VEL HEAD / SF AVE	ENERGY GRD.EL. / HF	SUPER ELEV	CRITICAL DEPTH / NORM DEPTH	HGT/ DIA	BASE/ ID NO.	ZL / ZR	NO PIER	AVBPR
0 3.60	.02500					.00352	.01		1.53			3.00		
0 13211.80	3377.29	2.68	3379.97	1614.0	5.58	.48	3380.46	.00	1.97		10.00	100.00	3.00	0 .00
0 3.25	.02500					.00409	.01		1.53			3.00		
0 13215.06	3377.38	2.56	3379.94	1614.0	5.85	.53	3380.47	.00	1.97		10.00	100.00	3.00	0 .00
0 2.89	.02500					.00476	.01		1.53			3.00		
0 13217.94	3377.45	2.45	3379.90	1614.0	6.13	.58	3380.48	.00	1.97		10.00	100.00	3.00	0 .00
0 2.06	.02500					.00545	.01		1.53			3.00		
0 13220.00	3377.50	2.36	3379.86	1614.0	6.38	.63	3380.50	.00	1.97		10.00	100.00	3.00	0 .00
0 13220.00	3377.50	2.99	3380.49	1614.0	9.14	1.30	3381.79	.00	2.99		10.00	50.00	3.00	0 .00
0 3.67	.00691					.00907	.03		3.30			3.00		
0 13223.67	3377.53	3.12	3380.64	1614.0	8.72	1.18	3381.83	.00	2.99		10.00	50.00	3.00	0 .00
0 24.49	.00691					.00786	.19		3.30			3.00		
0 13248.16	3377.69	3.25	3380.94	1614.0	8.31	1.07	3382.02	.00	2.99		10.00	50.00	3.00	0 .00
0 64.37	.00691					.00711	.46		3.30			3.00		
0 13312.54	3378.14	3.30	3381.44	1614.0	8.16	1.04	3382.48	.00	2.99		10.00	50.00	3.00	0 .00
0 4467.46	.00691					.00691	30.88		3.30			3.00		
0 17780.00	3409.00	3.30	3412.30	1614.0	8.16	1.04	3413.34	.00	2.99		10.00	50.00	3.00	0 .00
OJUNCT STR	.10000					.05774	1.15					3.00		
0 17800.00	3411.00	3.25	3414.25	1112.0	5.73	.51	3414.76	.00	2.37		10.00	50.00	3.00	0 .00
0 3.74	.02500					.00375	.01		1.83			3.00		
0 17803.74	3411.09	3.12	3414.21	1112.0	6.01	.56	3414.77	.00	2.37		10.00	50.00	3.00	0 .00
0 3.37	.02500					.00432	.01		1.83			3.00		
0 17807.12	3411.18	2.99	3414.17	1112.0	6.31	.62	3414.79	.00	2.37		10.00	50.00	3.00	0 .00
0 2.98	.02500					.00499	.01		1.83			3.00		
0 17810.09	3411.25	2.87	3414.12	1112.0	6.62	.68	3414.80	.00	2.37		10.00	50.00	3.00	0 .00
0 2.55	.02500					.00577	.01		1.83			3.00		
0 17812.64	3411.32	2.75	3414.07	1112.0	6.94	.75	3414.82	.00	2.37		10.00	50.00	3.00	0 .00
0 1.51	.02500					.00651	.01		1.83			3.00		
0 17814.15	3411.35	2.67	3414.03	1112.0	7.17	.80	3414.83	.00	2.37		10.00	50.00	3.00	0 .00
OHYDRAULIC JUMP												3.00		
0 17814.15	3411.35	2.08	3413.44	1112.0	9.49	1.40	3414.84	.00	2.37		10.00	50.00	3.00	0 .00
0 3.58	.02500					.01503	.05		1.83			3.00		
0 17817.73	3411.44	2.17	3413.62	1112.0	9.05	1.27	3414.89	.00	2.37		10.00	50.00	3.00	0 .00
0 1.76	.02500					.01299	.02		1.83			3.00		

WATER SURFACE PROFILE LISTING

KINGMAN MASTER DRAINAGE PLAN

RAILWAY 50 - 150

Q10

O STATION / O L/ELEM	INVERT ELEV / SO	DEPTH OF FLOW	W.S. ELEV	Q	VEL	VEL HEAD / SF AVE	ENERGY GRD.EL. / HF	SUPER ELEV	CRITICAL DEPTH	NORM DEPTH	HGT/ DIA	BASE/ ID NO.	ZL / ZR	NO PIER	AVBPR
0 17819.50	3411.49	2.27	3413.76	1112.0	8.63	1.16	3414.91	.00	2.37		10.00	50.00	3.00	0	.00
0 .50	.02500					.01121	.01			1.83			3.00		
0 17820.00	3411.50	2.37	3413.87	1112.0	8.23	1.05	3414.92	.00	2.37		10.00	50.00	3.00	0	.00
0 17820.00	3411.50	2.69	3414.19	1112.0	8.61	1.15	3415.34	.00	2.69		8.00	40.00	3.00	0	.00
0 2.60	.00677					.00947	.02			3.02			3.00		
0 17822.60	3411.52	2.80	3414.32	1112.0	8.21	1.05	3415.36	.00	2.69		8.00	40.00	3.00	0	.00
0 14.30	.00677					.00821	.12			3.02			3.00		
0 17836.90	3411.61	2.92	3414.53	1112.0	7.82	.95	3415.48	.00	2.69		8.00	40.00	3.00	0	.00
0 62.53	.00677					.00721	.45			3.02			3.00		
0 17899.43	3412.04	3.02	3415.05	1112.0	7.52	.88	3415.93	.00	2.69		8.00	40.00	3.00	0	.00
0 7080.57	.00677					.00678	48.01			3.02			3.00		
0 24980.00	3460.00	3.02	3463.01	1112.0	7.52	.88	3463.89	.00	2.69		8.00	40.00	3.00	0	.00
OJUNCT STR	.10000					.05062	1.01						3.00		
0 25000.00	3462.00	2.67	3464.67	528.0	4.11	.26	3464.94	.00	1.68		8.00	40.00	3.00	0	.00
0 3.60	.02500					.00251	.01			1.34			3.00		
0 25003.60	3462.09	2.57	3464.66	528.0	4.31	.29	3464.95	.00	1.68		8.00	40.00	3.00	0	.00
0 3.37	.02500					.00290	.01			1.34			3.00		
0 25006.97	3462.17	2.46	3464.64	528.0	4.52	.32	3464.95	.00	1.68		8.00	40.00	3.00	0	.00
0 3.13	.02500					.00334	.01			1.34			3.00		
0 25010.10	3462.25	2.36	3464.62	528.0	4.75	.35	3464.97	.00	1.68		8.00	40.00	3.00	0	.00
0 2.89	.02500					.00386	.01			1.34			3.00		
0 25012.99	3462.32	2.27	3464.59	528.0	4.98	.38	3464.98	.00	1.68		8.00	40.00	3.00	0	.00
0 2.63	.02500					.00446	.01			1.34			3.00		
0 25015.62	3462.39	2.17	3464.56	528.0	5.22	.42	3464.99	.00	1.68		8.00	40.00	3.00	0	.00
0 2.36	.02500					.00515	.01			1.34			3.00		
0 25017.98	3462.45	2.09	3464.53	528.0	5.47	.47	3465.00	.00	1.68		8.00	40.00	3.00	0	.00
0 2.02	.02500					.00594	.01			1.34			3.00		
0 25020.00	3462.50	2.00	3464.50	528.0	5.73	.51	3465.01	.00	1.68		8.00	40.00	3.00	0	.00
0 .00	.02500					.00860	.00			1.34			3.00		
0 25020.00	3462.50	2.45	3464.95	528.0	7.88	.97	3465.92	.00	2.45		8.00	20.00	3.00	0	.00
0 1.20	.00534					.01015	.01			2.97			3.00		
0 25021.20	3462.51	2.54	3465.05	528.0	7.51	.88	3465.93	.00	2.45		8.00	20.00	3.00	0	.00
0 4.76	.00534					.00886	.04			2.97			3.00		
0 25025.96	3462.53	2.64	3465.17	528.0	7.16	.80	3465.97	.00	2.45		8.00	20.00	3.00	0	.00

WATER SURFACE PROFILE LISTING

KINGMAN MASTER DRAINAGE PLAN

RAILWAY 50 - 150

Q10

O STATION / O L/ELEM	INVERT ELEV / SO	DEPTH OF FLOW	W.S. ELEV	Q	VEL	VEL HEAD / SF AVE	ENERGY GRD.EL. / HF	SUPER ELEV	CRITICAL DEPTH	NORM DEPTH	HGT/ DIA	BASE/ ID NO.	ZL / ZR	NO PIER	AVBPR
0	11.34					.00773	.09			2.97			3.00		
0	25037.31	3462.59	2.74	3465.33	528.0	6.83	.73	3466.06	.00	2.45		8.00	20.00	3.00	0	.00
0	26.24	.00534					.00674	.18			2.97			3.00		
0	25063.54	3462.73	2.84	3465.57	528.0	6.51	.66	3466.23	.00	2.45		8.00	20.00	3.00	0	.00
0	84.25	.00534					.00589	.50			2.97			3.00		
0	25147.80	3463.18	2.95	3466.13	528.0	6.21	.60	3466.73	.00	2.45		8.00	20.00	3.00	0	.00
0	131.32	.00534					.00542	.71			2.97			3.00		
0	25279.12	3463.88	2.97	3466.85	528.0	6.15	.59	3467.44	.00	2.45		8.00	20.00	3.00	0	.00
0	4700.89	.00534					.00535	25.14			2.97			3.00		
0	29980.00	3489.00	2.97	3491.97	528.0	6.15	.59	3492.56	.00	2.45		8.00	20.00	3.00	0	.00
0	-.00	.00534					.03239	.00			2.97			3.00		
0	29980.00	3489.00	2.97	3491.97	528.0	6.15	.59	3492.56	.00	2.45		8.00	20.00	3.00	0	.00
OJUNCT STR		.10000					.03446	.69						3.00		
0	30000.00	3491.00	2.18	3493.18	120.0	2.07	.07	3493.25	.00	.99		8.00	20.00	3.00	0	.00
0	3.13	.02500					.00092	.00			.83			3.00		
0	30003.13	3491.08	2.10	3493.18	120.0	2.17	.07	3493.25	.00	.99		8.00	20.00	3.00	0	.00
0	3.01	.02500					.00106	.00			.83			3.00		
0	30006.14	3491.15	2.02	3493.17	120.0	2.28	.08	3493.25	.00	.99		8.00	20.00	3.00	0	.00
0	2.89	.02500					.00121	.00			.83			3.00		
0	30009.03	3491.23	1.94	3493.17	120.0	2.39	.09	3493.26	.00	.99		8.00	20.00	3.00	0	.00
0	2.77	.02500					.00139	.00			.83			3.00		
0	30011.79	3491.29	1.87	3493.16	120.0	2.51	.10	3493.26	.00	.99		8.00	20.00	3.00	0	.00
0	2.65	.02500					.00160	.00			.83			3.00		
0	30014.45	3491.36	1.80	3493.16	120.0	2.63	.11	3493.26	.00	.99		8.00	20.00	3.00	0	.00
0	2.53	.02500					.00184	.00			.83			3.00		
0	30016.98	3491.42	1.73	3493.15	120.0	2.76	.12	3493.27	.00	.99		8.00	20.00	3.00	0	.00
0	2.41	.02500					.00212	.01			.83			3.00		
0	30019.39	3491.48	1.66	3493.14	120.0	2.89	.13	3493.27	.00	.99		8.00	20.00	3.00	0	.00
0	.61	.02500					.00231	.00			.83			3.00		
0	30020.00	3491.50	1.64	3493.14	120.0	2.93	.13	3493.28	.00	.99		8.00	20.00	3.00	0	.00
0	-.00	.02500					.00499	.00			.83			3.00		
0	30020.00	3491.50	1.64	3493.14	120.0	4.89	.37	3493.51	.00	1.42		7.00	10.00	3.00	0	.00
0	5.13	.00210					.00715	.04			2.30			3.00		
0	30025.13	3491.51	1.70	3493.21	120.0	4.67	.34	3493.55	.00	1.42		7.00	10.00	3.00	0	.00

WATER SURFACE PROFILE LISTING

KINGMAN MASTER DRAINAGE PLAN

RAILWAY 50 - 150

Q10

O STATION / O L/ELEM	INVERT ELEV / SO	DEPTH OF FLOW	W.S. ELEV	Q	VEL	VEL HEAD / SF AVE	ENERGY GRD.EL. / HF	SUPER ELEV	CRITICAL DEPTH / NORM DEPTH	HGT/ DIA	BASE/ ID NO.	ZL / ZR	NO PIER	AVBPR
0 7.42	.00210					.00625	.05		2.30			3.00		
0 30032.55	3491.53	1.76	3493.29	120.0	4.45	.31	3493.60	.00	1.42	7.00	10.00	3.00	0	.00
0 10.53	.00210					.00547	.06		2.30			3.00		
0 30043.08	3491.55	1.83	3493.38	120.0	4.24	.28	3493.66	.00	1.42	7.00	10.00	3.00	0	.00
0 14.86	.00210					.00478	.07		2.30			3.00		
0 30057.94	3491.58	1.89	3493.47	120.0	4.04	.25	3493.73	.00	1.42	7.00	10.00	3.00	0	.00
0 21.16	.00210					.00419	.09		2.30			3.00		
0 30079.11	3491.62	1.96	3493.58	120.0	3.86	.23	3493.82	.00	1.42	7.00	10.00	3.00	0	.00
0 30.85	.00210					.00366	.11		2.30			3.00		
0 30109.96	3491.69	2.03	3493.72	120.0	3.68	.21	3493.93	.00	1.42	7.00	10.00	3.00	0	.00
0 47.15	.00210					.00321	.15		2.30			3.00		
0 30157.10	3491.79	2.10	3493.89	120.0	3.51	.19	3494.08	.00	1.42	7.00	10.00	3.00	0	.00
0 79.17	.00210					.00281	.22		2.30			3.00		
0 30236.27	3491.95	2.17	3494.13	120.0	3.34	.17	3494.30	.00	1.42	7.00	10.00	3.00	0	.00
0 166.82	.00210					.00246	.41		2.30			3.00		
0 30403.09	3492.31	2.25	3494.55	120.0	3.19	.16	3494.71	.00	1.42	7.00	10.00	3.00	0	.00
0 428.96	.00210					.00220	.94		2.30			3.00		
0 30832.05	3493.21	2.30	3495.51	120.0	3.09	.15	3495.66	.00	1.42	7.00	10.00	3.00	0	.00
0 2467.95	.00210					.00210	5.19		2.30			3.00		
0 33300.00	3498.40	2.30	3500.70	120.0	3.09	.15	3500.85	.00	1.42	7.00	10.00	3.00	0	.00
1														

WATER SURFACE PROFILE LISTING

KINGMAN MASTER DRAINAGE PLAN

LINE Cb

Q10

0 STATION	INVERT ELEV	DEPTH OF FLOW	W.S. ELEV	Q	VEL	VEL HEAD	ENERGY GRD.EL.	SUPER ELEV	CRITICAL DEPTH		HGT/ DIA	BASE/ ID NO.	ZL	NO PIER	AVBPR
0 L/ELEM	SO					SF AVE	HF			NORM DEPTH			ZR		
0 .00	3381.00	4.00	3385.00	598.0	2.88	.13	3385.13	.00	1.82		6.00	40.00	3.00	0	.00
0 14.93	.01011					.00077	.01			1.88			3.00		
0 14.93	3381.15	3.85	3385.00	598.0	3.02	.14	3385.14	.00	1.82		6.00	40.00	3.00	0	.00
0 14.44	.01011					.00089	.01			1.88			3.00		
0 29.37	3381.30	3.70	3385.00	598.0	3.16	.16	3385.15	.00	1.82		6.00	40.00	3.00	0	.00
0 13.96	.01011					.00102	.01			1.88			3.00		
0 43.32	3381.44	3.56	3385.00	598.0	3.32	.17	3385.17	.00	1.82		6.00	40.00	3.00	0	.00
0 13.49	.01011					.00117	.02			1.88			3.00		
0 56.81	3381.57	3.42	3384.99	598.0	3.48	.19	3385.18	.00	1.82		6.00	40.00	3.00	0	.00
0 13.04	.01011					.00135	.02			1.88			3.00		
0 69.85	3381.71	3.29	3384.99	598.0	3.65	.21	3385.20	.00	1.82		6.00	40.00	3.00	0	.00
0 12.60	.01011					.00156	.02			1.88			3.00		
0 82.45	3381.83	3.16	3384.99	598.0	3.83	.23	3385.22	.00	1.82		6.00	40.00	3.00	0	.00
0 12.18	.01011					.00179	.02			1.88			3.00		
0 94.64	3381.96	3.03	3384.99	598.0	4.01	.25	3385.24	.00	1.82		6.00	40.00	3.00	0	.00
0 11.78	.01011					.00206	.02			1.88			3.00		
0 106.42	3382.08	2.91	3384.99	598.0	4.21	.28	3385.27	.00	1.82		6.00	40.00	3.00	0	.00
0 11.40	.01011					.00238	.03			1.88			3.00		
0 117.81	3382.19	2.80	3384.99	598.0	4.41	.30	3385.29	.00	1.82		6.00	40.00	3.00	0	.00
0 11.03	.01011					.00274	.03			1.88			3.00		
0 128.85	3382.30	2.69	3384.99	598.0	4.63	.33	3385.32	.00	1.82		6.00	40.00	3.00	0	.00
0 10.70	.01011					.00316	.03			1.88			3.00		
0 139.55	3382.41	2.58	3384.99	598.0	4.86	.37	3385.36	.00	1.82		6.00	40.00	3.00	0	.00
0 10.40	.01011					.00365	.04			1.88			3.00		
0 149.94	3382.52	2.48	3384.99	598.0	5.09	.40	3385.40	.00	1.82		6.00	40.00	3.00	0	.00
0 10.13	.01011					.00421	.04			1.88			3.00		
0 160.08	3382.62	2.38	3384.99	598.0	5.34	.44	3385.44	.00	1.82		6.00	40.00	3.00	0	.00
0 9.93	.01011					.00486	.05			1.88			3.00		
0 170.01	3382.72	2.28	3385.00	598.0	5.60	.49	3385.49	.00	1.82		6.00	40.00	3.00	0	.00
0 9.83	.01011					.00561	.06			1.88			3.00		
0 179.84	3382.82	2.19	3385.00	598.0	5.88	.54	3385.54	.00	1.82		6.00	40.00	3.00	0	.00
0 9.92	.01011					.00649	.06			1.88			3.00		
0 189.76	3382.92	2.10	3385.02	598.0	6.16	.59	3385.61	.00	1.82		6.00	40.00	3.00	0	.00
0 10.43	.01011					.00750	.08			1.88			3.00		

WATER SURFACE PROFILE LISTING

KINGMAN MASTER DRAINAGE PLAN

LINE Cb

Q10

0 STATION / 0 L/ELEM	INVERT ELEV / SO	DEPTH OF FLOW	W.S. ELEV	Q	VEL	VEL HEAD / SF AVE	ENERGY GRD.EL. / HF	SUPER ELEV	CRITICAL DEPTH / NORM DEPTH	HGT/ DIA	BASE/ ID NO.	ZL / ZR	NO PIER	AVBPR
0 200.19	3383.02	2.01	3385.03	598.0	6.46	.65	3385.68	.00	1.82	6.00	40.00	3.00	0	.00
0 12.60	.01011					.00867	.11		1.88			3.00		
0 212.80	3383.15	1.93	3385.08	598.0	6.78	.71	3385.79	.00	1.82	6.00	40.00	3.00	0	.00
0 15.39	.01011					.00971	.15		1.88			3.00		
0 228.19	3383.31	1.88	3385.19	598.0	6.97	.75	3385.94	.00	1.82	6.00	40.00	3.00	0	.00
0 8571.81	.01011					.01012	86.77		1.88			3.00		
0 8800.00	3470.00	1.88	3471.88	598.0	6.97	.75	3472.64	.00	1.82	6.00	40.00	3.00	0	.00
1														

WATER SURFACE PROFILE LISTING

KINGMAN MASTER DRAINAGE PLAN

LINE Cc

Q10

O	STATION	INVERT ELEV	DEPTH OF FLOW	W.S. ELEV	Q	VEL	VEL HEAD	ENERGY GRD.EL.	SUPER ELEV	CRITICAL DEPTH		HGT/ DIA	BASE/ ID NO.	ZL	NO PIER	AVBPR
O	L/ELEM	SO					SF AVE	HF			NORM DEPTH			ZR		
0	.00	3341.00	4.00	3345.00	1563.0	5.43	.46	3345.46	.00	2.64		8.00	60.00	3.00	0	.00
0	11.48	.01254					.00255	.03			2.47			3.00		
0	11.48	3341.14	3.84	3344.98	1563.0	5.69	.50	3345.49	.00	2.64		8.00	60.00	3.00	0	.00
0	10.88	.01254					.00294	.03			2.47			3.00		
0	22.37	3341.28	3.68	3344.97	1563.0	5.97	.55	3345.52	.00	2.64		8.00	60.00	3.00	0	.00
0	10.26	.01254					.00340	.03			2.47			3.00		
0	32.63	3341.41	3.54	3344.94	1563.0	6.26	.61	3345.55	.00	2.64		8.00	60.00	3.00	0	.00
0	9.62	.01254					.00392	.04			2.47			3.00		
0	42.25	3341.53	3.39	3344.92	1563.0	6.57	.67	3345.59	.00	2.64		8.00	60.00	3.00	0	.00
0	8.94	.01254					.00453	.04			2.47			3.00		
0	51.19	3341.64	3.25	3344.90	1563.0	6.89	.74	3345.63	.00	2.64		8.00	60.00	3.00	0	.00
0	8.19	.01254					.00524	.04			2.47			3.00		
0	59.38	3341.74	3.12	3344.86	1563.0	7.22	.81	3345.68	.00	2.64		8.00	60.00	3.00	0	.00
0	7.32	.01254					.00606	.04			2.47			3.00		
0	66.70	3341.84	2.99	3344.83	1563.0	7.58	.89	3345.72	.00	2.64		8.00	60.00	3.00	0	.00
0	6.24	.01254					.00700	.04			2.47			3.00		
0	72.94	3341.91	2.87	3344.78	1563.0	7.95	.98	3345.76	.00	2.64		8.00	60.00	3.00	0	.00
0	2.41	.01254					.00775	.02			2.47			3.00		
0	75.35	3341.94	2.82	3344.76	1563.0	8.11	1.02	3345.78	.00	2.64		8.00	60.00	3.00	0	.00
OHYDRAULIC JUMP														3.00		
0	75.35	3341.94	2.47	3344.41	1563.0	9.39	1.37	3345.78	.00	2.64		8.00	60.00	3.00	0	.00
0	3086.57	.01254					.01256	38.75			2.47			3.00		
0	3161.92	3380.65	2.47	3383.12	1563.0	9.39	1.37	3384.49	.00	2.64		8.00	60.00	3.00	0	.00
0	23.57	.01254					.01207	.28			2.47			3.00		
0	3185.49	3380.94	2.53	3383.47	1563.0	9.15	1.30	3384.77	.00	2.64		8.00	60.00	3.00	0	.00
0	4.51	.01254					.01079	.05			2.47			3.00		
0	3190.00	3381.00	2.64	3383.64	1563.0	8.72	1.18	3384.82	.00	2.64		8.00	60.00	3.00	0	.00
OJUNCT STR		.02000					.05946	.59						3.00		
0	3200.00	3381.20	4.08	3385.28	884.0	3.00	.14	3385.42	.00	1.83		8.00	60.00	3.00	0	.00
OTRANS STR		.33000												3.00		
0	3210.00	3384.50	1.83	3386.33	884.0	7.38	.85	3387.18	.00	1.83		8.00	60.00	3.00	0	.00
0	3210.00	3384.50	2.33	3386.83	884.0	8.08	1.01	3387.84	.00	2.33		6.00	40.00	3.00	0	.00
0	2.99	.01000					.01028	.03			2.37			3.00		
0	3212.99	3384.53	2.37	3386.89	884.0	7.94	.98	3387.87	.00	2.33		6.00	40.00	3.00	0	.00

WATER SURFACE PROFILE LISTING

KINGMAN MASTER DRAINAGE PLAN

LINE Cc

Q10

0 STATION / 0 L/ELEM	INVERT ELEV / SO	DEPTH OF FLOW	W.S. ELEV	Q	VEL	VEL HEAD / SF AVE	ENERGY GRD.EL. / HF	SUPER ELEV	CRITICAL DEPTH	NORM DEPTH	HGT/ DIA	BASE/ ID NO.	ZL / ZR	NO PIER	AVBPR
0 1.59	.01000					.01001	.02			2.37			3.00		
0 3214.58	3384.55	2.37	3386.91	884.0	7.94	.98	3387.89	.00	2.33		6.00	40.00	3.00	0	.00
													3.00		
OHYDRAULIC JUMP															
0 3214.58	3384.55	2.29	3386.84	884.0	8.22	1.05	3387.89	.00	2.33		6.00	40.00	3.00	0	.00
0 2.52	.01000					.01147	.03			2.37			3.00		
0 3217.10	3384.57	2.26	3386.83	884.0	8.38	1.09	3387.92	.00	2.33		6.00	40.00	3.00	0	.00
0 6.24	.01000					.01271	.08			2.37			3.00		
0 3223.34	3384.63	2.16	3386.80	884.0	8.79	1.20	3388.00	.00	2.33		6.00	40.00	3.00	0	.00
0 6.66	.01000					.01468	.10			2.37			3.00		
0 3230.00	3384.70	2.08	3386.77	884.0	9.22	1.32	3388.09	.00	2.33		6.00	40.00	3.00	0	.00
0 .00	.01000					.01575	.00			2.37			3.00		
0 3230.00	3384.70	2.08	3386.78	884.0	9.22	1.32	3388.10	.00	2.33		6.00	40.00	3.00	0	.00
0 7928.99	.01572					.01575	*****			2.08			3.00		
0 11158.99	3509.36	2.08	3511.43	884.0	9.22	1.32	3512.75	.00	2.33		6.00	40.00	3.00	0	.00
0 31.52	.01572					.01493	.47			2.08			3.00		
0 11190.51	3509.85	2.14	3511.99	884.0	8.89	1.23	3513.22	.00	2.33		6.00	40.00	3.00	0	.00
0 7.94	.01572					.01316	.10			2.08			3.00		
0 11198.45	3509.98	2.23	3512.21	884.0	8.48	1.12	3513.33	.00	2.33		6.00	40.00	3.00	0	.00
0 1.55	.01572					.01139	.02			2.08			3.00		
0 11200.00	3510.00	2.33	3512.33	884.0	8.08	1.01	3513.34	.00	2.33		6.00	40.00	3.00	0	.00
1															

WATER SURFACE PROFILE LISTING

KINGMAN MASTER DRAINAGE PLAN

LINE Cd

Q10

O STATION / O L/ELEM	INVERT ELEV / SO	DEPTH OF FLOW	W.S. ELEV	Q	VEL	VEL HEAD / SF AVE	ENERGY GRD.EL. / HF	SUPER ELEV	CRITICAL DEPTH / NORM DEPTH		HGT/ DIA	BASE/ ID NO.	ZL / ZR	NO PIER	AVBPR
0 .00	3382.00	3.50	3385.50	1639.0	6.64	.69	3386.19	.00	2.72		7.00	60.00	3.00	0	.00
0 7.97	.01375					.00447	.04			2.47			3.00		
0 7.97	3382.11	3.36	3385.47	1639.0	6.97	.75	3386.22	.00	2.72		7.00	60.00	3.00	0	.00
0 7.21	.01375					.00516	.04			2.47			3.00		
0 15.18	3382.21	3.22	3385.43	1639.0	7.31	.83	3386.26	.00	2.72		7.00	60.00	3.00	0	.00
0 6.33	.01375					.00597	.04			2.47			3.00		
0 21.51	3382.30	3.09	3385.38	1639.0	7.66	.91	3386.30	.00	2.72		7.00	60.00	3.00	0	.00
0 4.44	.01375					.00680	.03			2.47			3.00		
0 25.95	3382.36	2.98	3385.34	1639.0	7.97	.99	3386.33	.00	2.72		7.00	60.00	3.00	0	.00
OHYDRAULIC JUMP													3.00		
0 25.95	3382.36	2.47	3384.83	1639.0	9.84	1.50	3386.33	.00	2.72		7.00	60.00	3.00	0	.00
0 128.06	.01375					.01377	1.76			2.47			3.00		
0 154.02	3384.12	2.47	3386.59	1639.0	9.84	1.50	3388.09	.00	2.72		7.00	60.00	3.00	0	.00
0 30.55	.01375					.01385	.42			2.47			3.00		
0 184.56	3384.54	2.46	3387.00	1639.0	9.88	1.52	3388.52	.00	2.72		7.00	60.00	3.00	0	.00
0 37.19	.01375					.01504	.56			2.47			3.00		
0 221.75	3385.05	2.36	3387.41	1639.0	10.36	1.67	3389.08	.00	2.72		7.00	60.00	3.00	0	.00
0 18.25	.01375					.01743	.32			2.47			3.00		
0 240.00	3385.30	2.26	3387.56	1639.0	10.87	1.83	3389.39	.00	2.72		7.00	60.00	3.00	0	.00
0 708.18	.01869					.01871	13.25			2.26			3.00		
0 948.18	3398.53	2.26	3400.79	1639.0	10.87	1.83	3402.63	.00	2.72		7.00	60.00	3.00	0	.00
0 55.55	.01869					.01794	1.00			2.26			3.00		
0 1003.73	3399.57	2.32	3401.89	1639.0	10.57	1.74	3403.62	.00	2.72		7.00	60.00	3.00	0	.00
0 20.64	.01869					.01599	.33			2.26			3.00		
0 1024.37	3399.96	2.42	3402.38	1639.0	10.07	1.58	3403.95	.00	2.72		7.00	60.00	3.00	0	.00
0 7.63	.01869					.01380	.11			2.26			3.00		
0 1032.00	3400.10	2.53	3402.62	1639.0	9.61	1.43	3404.06	.00	2.72		7.00	60.00	3.00	0	.00
0 1080.66	.01277					.01279	13.82			2.53			3.00		
0 2112.66	3413.90	2.53	3416.43	1639.0	9.61	1.43	3417.86	.00	2.72		7.00	60.00	3.00	0	.00
0 23.34	.01277					.01283	.30			2.53			3.00		
0 2136.00	3414.20	2.52	3416.72	1639.0	9.63	1.44	3418.16	.00	2.72		7.00	60.00	3.00	0	.00
0 1059.47	.01286					.01287	13.64			2.52			3.00		
0 3195.47	3427.83	2.52	3430.35	1639.0	9.63	1.44	3431.79	.00	2.72		7.00	60.00	3.00	0	.00
0 44.53	.01286					.01284	.57			2.52			3.00		

WATER SURFACE PROFILE LISTING

KINGMAN MASTER DRAINAGE PLAN

LINE Cd

Q10

O	STATION	INVERT ELEV	DEPTH OF FLOW	W.S. ELEV	Q	VEL	VEL HEAD	ENERGY GRD.EL.	SUPER ELEV	CRITICAL DEPTH		HGT/ DIA	BASE/ ID NO.	ZL	NO PIER	AVBPR
O	L/ELEM	SO					SF AVE	HF			NORM DEPTH			ZR		
0	3240.00	3428.40	2.52	3430.92	1639.0	9.61	1.44	3432.36	.00	2.72		7.00	60.00	3.00	0	.00
0	793.45	.01280					.01280	10.16			2.52			3.00		
0	4033.45	3438.56	2.52	3441.08	1639.0	9.61	1.44	3442.52	.00	2.72		7.00	60.00	3.00	0	.00
0	34.55	.01280					.01279	.44			2.52			3.00		
0	4068.00	3439.00	2.53	3441.52	1639.0	9.61	1.43	3442.96	.00	2.72		7.00	60.00	3.00	0	.00
0	1092.20	.01277					.01279	13.96			2.53			3.00		
0	5160.20	3452.95	2.53	3455.47	1639.0	9.61	1.43	3456.91	.00	2.72		7.00	60.00	3.00	0	.00
0	11.80	.01277					.01279	.15			2.53			3.00		
0	5172.00	3453.10	2.52	3455.62	1639.0	9.61	1.44	3457.06	.00	2.72		7.00	60.00	3.00	0	.00
0	758.22	.01280					.01280	9.71			2.52			3.00		
0	5930.22	3462.81	2.52	3465.33	1639.0	9.61	1.44	3466.77	.00	2.72		7.00	60.00	3.00	0	.00
0	34.51	.01280					.01341	.46			2.52			3.00		
0	5964.73	3463.25	2.46	3465.71	1639.0	9.90	1.52	3467.23	.00	2.72		7.00	60.00	3.00	0	.00
0	20.92	.01280					.01513	.32			2.52			3.00		
0	5985.64	3463.52	2.35	3465.87	1639.0	10.38	1.67	3467.55	.00	2.72		7.00	60.00	3.00	0	.00
0	14.36	.01280					.01753	.25			2.52			3.00		
0	6000.00	3463.70	2.26	3465.96	1639.0	10.89	1.84	3467.80	.00	2.72		7.00	60.00	3.00	0	.00
0	974.19	.01880					.01882	18.34			2.26			3.00		
0	6974.19	3482.02	2.26	3484.27	1639.0	10.89	1.84	3486.12	.00	2.72		7.00	60.00	3.00	0	.00
0	62.81	.01880					.01864	1.17			2.26			3.00		
0	7037.00	3483.20	2.27	3485.47	1639.0	10.82	1.82	3487.29	.00	2.72		7.00	60.00	3.00	0	.00
0	1057.00	.01845					.01846	19.51			2.27			3.00		
0	8094.00	3502.70	2.27	3504.97	1639.0	10.82	1.82	3506.79	.00	2.72		7.00	60.00	3.00	0	.00
0	815.27	.01843					.01846	15.05			2.27			3.00		
0	8909.27	3517.73	2.27	3520.00	1639.0	10.82	1.82	3521.81	.00	2.72		7.00	60.00	3.00	0	.00
0	10.98	.01843					.01847	.20			2.27			3.00		
0	8920.25	3517.93	2.27	3520.20	1639.0	10.82	1.82	3522.02	.00	2.72		7.00	60.00	3.00	0	.00
0	56.79	.01843					.01994	1.13			2.27			3.00		
0	8977.04	3518.98	2.17	3521.15	1639.0	11.35	2.00	3523.15	.00	2.72		7.00	60.00	3.00	0	.00
0	22.96	.01843					.02313	.53			2.27			3.00		
0	9000.00	3519.40	2.08	3521.48	1639.0	11.90	2.20	3523.68	.00	2.72		7.00	60.00	3.00	0	.00
0	930.57	.02480					.02484	23.11			2.08			3.00		
0	9930.57	3542.48	2.08	3544.56	1639.0	11.90	2.20	3546.76	.00	2.72		7.00	60.00	3.00	0	.00
0	69.43	.02480					.02432	1.69			2.08			3.00		

WATER SURFACE PROFILE LISTING

KINGMAN MASTER DRAINAGE PLAN

LINE Cd

Q10

O	STATION	INVERT ELEV	DEPTH OF FLOW	W.S. ELEV	Q	VEL	VEL HEAD	ENERGY GRD.EL.	SUPER ELEV	CRITICAL DEPTH		HGT/ DIA	BASE/ ID NO.	ZL	NO PIER	AVBPR
O	L/ELEM	SO					SF AVE	HF			NORM DEPTH			ZR		
0	10000.00	3544.20	2.11	3546.31	1639.0	11.74	2.14	3548.45	.00	2.72		7.00	60.00	3.00	0	.00
0	906.33	.02380					.02381	21.58			2.11			3.00		
0	10906.33	3565.77	2.11	3567.88	1639.0	11.74	2.14	3570.02	.00	2.72		7.00	60.00	3.00	0	.00
0	62.32	.02380					.02228	1.39			2.11			3.00		
0	10968.65	3567.25	2.19	3569.45	1639.0	11.24	1.96	3571.41	.00	2.72		7.00	60.00	3.00	0	.00
0	18.23	.02380					.01933	.35			2.11			3.00		
0	10986.88	3567.69	2.29	3569.98	1639.0	10.71	1.78	3571.76	.00	2.72		7.00	60.00	3.00	0	.00
0	8.61	.02380					.01668	.14			2.11			3.00		
0	10995.48	3567.89	2.39	3570.28	1639.0	10.21	1.62	3571.90	.00	2.72		7.00	60.00	3.00	0	.00
0	4.52	.02380					.01440	.07			2.11			3.00		
0	11000.00	3568.00	2.49	3570.49	1639.0	9.74	1.47	3571.97	.00	2.72		7.00	60.00	3.00	0	.00
0	.00	.02380					.01334	.00			2.11			3.00		
0	11000.00	3568.00	2.49	3570.49	1639.0	9.74	1.47	3571.97	.00	2.72		7.00	60.00	3.00	0	.00
0	525.02	.01333					.01334	7.00			2.49			3.00		
0	11525.02	3575.00	2.49	3577.49	1639.0	9.74	1.47	3578.97	.00	2.72		7.00	60.00	3.00	0	.00
0	45.92	.01333					.01332	.61			2.49			3.00		
0	11570.95	3575.61	2.50	3578.11	1639.0	9.73	1.47	3579.58	.00	2.72		7.00	60.00	3.00	0	.00
0	25.99	.01333					.01239	.32			2.49			3.00		
0	11596.94	3575.96	2.61	3578.56	1639.0	9.28	1.34	3579.90	.00	2.72		7.00	60.00	3.00	0	.00
0	3.06	.01333					.01069	.03			2.49			3.00		
0	11600.00	3576.00	2.72	3578.72	1639.0	8.84	1.21	3579.93	.00	2.72		7.00	60.00	3.00	0	.00
0	.89	.00071					.00923	.01			5.77			3.00		
0	11600.89	3576.00	2.84	3578.84	1639.0	8.43	1.10	3579.94	.00	2.72		7.00	60.00	3.00	0	.00
0	3.06	.00071					.00798	.02			5.77			3.00		
0	11603.95	3576.00	2.96	3578.96	1639.0	8.04	1.00	3579.97	.00	2.72		7.00	60.00	3.00	0	.00
0	5.84	.00071					.00690	.04			5.77			3.00		
0	11609.79	3576.01	3.09	3579.10	1639.0	7.66	.91	3580.01	.00	2.72		7.00	60.00	3.00	0	.00
0	9.39	.00071					.00597	.06			5.77			3.00		
0	11619.17	3576.01	3.22	3579.23	1639.0	7.31	.83	3580.06	.00	2.72		7.00	60.00	3.00	0	.00
0	13.91	.00071					.00516	.07			5.77			3.00		
0	11633.08	3576.02	3.36	3579.38	1639.0	6.97	.75	3580.14	.00	2.72		7.00	60.00	3.00	0	.00
0	19.69	.00071					.00447	.09			5.77			3.00		
0	11652.78	3576.04	3.50	3579.54	1639.0	6.64	.69	3580.22	.00	2.72		7.00	60.00	3.00	0	.00
0	27.10	.00071					.00387	.10			5.77			3.00		

WATER SURFACE PROFILE LISTING

KINGMAN MASTER DRAINAGE PLAN

LINE Cd

Q10

O STATION / O L/ELEM	INVERT ELEV / SO	DEPTH OF FLOW	W.S. ELEV	Q	VEL	VEL HEAD / SF AVE	ENERGY GRD.EL. / HF	SUPER ELEV	CRITICAL DEPTH / NORM DEPTH	HGT/ DIA	BASE/ ID NO.	ZL / ZR	NO PIER	AVBPR
0 11679.88	3576.06	3.65	3579.71	1639.0	6.33	.62	3580.33	.00	2.72	7.00	60.00	3.00	0	.00
0 36.66	.00071					.00335	.12		5.77			3.00		
0 11716.54	3576.08	3.80	3579.88	1639.0	6.04	.57	3580.45	.00	2.72	7.00	60.00	3.00	0	.00
0 49.08	.00071					.00291	.14		5.77			3.00		
0 11765.63	3576.12	3.96	3580.08	1639.0	5.76	.52	3580.59	.00	2.72	7.00	60.00	3.00	0	.00
0 65.43	.00071					.00252	.16		5.77			3.00		
0 11831.06	3576.17	4.13	3580.29	1639.0	5.49	.47	3580.76	.00	2.72	7.00	60.00	3.00	0	.00
0 87.29	.00071					.00218	.19		5.77			3.00		
0 11918.35	3576.23	4.30	3580.52	1639.0	5.23	.43	3580.95	.00	2.72	7.00	60.00	3.00	0	.00
0 117.17	.00071					.00190	.22		5.77			3.00		
0 12035.51	3576.31	4.47	3580.78	1639.0	4.99	.39	3581.17	.00	2.72	7.00	60.00	3.00	0	.00
0 159.27	.00071					.00164	.26		5.77			3.00		
0 12194.79	3576.42	4.66	3581.08	1639.0	4.76	.35	3581.43	.00	2.72	7.00	60.00	3.00	0	.00
0 221.21	.00071					.00143	.32		5.77			3.00		
0 12415.99	3576.58	4.85	3581.43	1639.0	4.54	.32	3581.75	.00	2.72	7.00	60.00	3.00	0	.00
0 318.31	.00071					.00124	.39		5.77			3.00		
0 12734.30	3576.81	5.04	3581.85	1639.0	4.33	.29	3582.14	.00	2.72	7.00	60.00	3.00	0	.00
0 486.71	.00071					.00108	.52		5.77			3.00		
0 13221.01	3577.16	5.25	3582.40	1639.0	4.12	.26	3582.67	.00	2.72	7.00	60.00	3.00	0	.00
0 836.86	.00071					.00094	.78		5.77			3.00		
0 14057.86	3577.75	5.46	3583.21	1639.0	3.93	.24	3583.45	.00	2.72	7.00	60.00	3.00	0	.00
0 342.14	.00071					.00086	.29		5.77			3.00		
0 14400.00	3578.00	5.51	3583.51	1639.0	3.88	.23	3583.75	.00	2.72	7.00	60.00	3.00	0	.00

1

WATER SURFACE PROFILE LISTING

KINGMAN MASTER DRAINAGE PLAN

LINE Ce

Q10

O STATION / O L/ELEM	INVERT ELEV / SO	DEPTH OF FLOW	W.S. ELEV	Q	VEL	VEL HEAD / SF AVE	ENERGY GRD.EL. / HF	SUPER ELEV	CRITICAL DEPTH / NORM DEPTH	HGT/ DIA	BASE/ ID NO.	ZL / ZR	NO PIER	AVBPR
0 .00	3415.00	3.00	3418.00	556.0	3.78	.22	3418.22	.00	1.74	6.00	40.00	3.00	0	.00
0 23.35	.00599					.00186	.04		2.10			3.00		
0 23.35	3415.14	2.88	3418.02	556.0	3.97	.24	3418.27	.00	1.74	6.00	40.00	3.00	0	.00
0 23.42	.00599					.00214	.05		2.10			3.00		
0 46.78	3415.28	2.77	3418.05	556.0	4.16	.27	3418.32	.00	1.74	6.00	40.00	3.00	0	.00
0 23.76	.00599					.00247	.06		2.10			3.00		
0 70.54	3415.42	2.66	3418.08	556.0	4.36	.30	3418.37	.00	1.74	6.00	40.00	3.00	0	.00
0 24.53	.00599					.00285	.07		2.10			3.00		
0 95.07	3415.57	2.55	3418.12	556.0	4.58	.33	3418.44	.00	1.74	6.00	40.00	3.00	0	.00
0 26.00	.00599					.00328	.09		2.10			3.00		
0 121.07	3415.72	2.45	3418.17	556.0	4.80	.36	3418.53	.00	1.74	6.00	40.00	3.00	0	.00
0 28.84	.00599					.00379	.11		2.10			3.00		
0 149.90	3415.90	2.35	3418.24	556.0	5.03	.39	3418.64	.00	1.74	6.00	40.00	3.00	0	.00
0 34.90	.00599					.00438	.15		2.10			3.00		
0 184.80	3416.11	2.25	3418.36	556.0	5.28	.43	3418.79	.00	1.74	6.00	40.00	3.00	0	.00
0 52.42	.00599					.00506	.27		2.10			3.00		
0 237.22	3416.42	2.16	3418.58	556.0	5.54	.48	3419.06	.00	1.74	6.00	40.00	3.00	0	.00
0 46.78	.00599					.00559	.26		2.10			3.00		
0 284.00	3416.70	2.12	3418.82	556.0	5.65	.50	3419.32	.00	1.74	6.00	40.00	3.00	0	.00
0 6.32	.01217					.00621	.04		1.71			3.00		
0 290.32	3416.78	2.03	3418.81	556.0	5.93	.55	3419.36	.00	1.74	6.00	40.00	3.00	0	.00
0 5.90	.01217					.00718	.04		1.71			3.00		
0 296.22	3416.85	1.95	3418.80	556.0	6.22	.60	3419.40	.00	1.74	6.00	40.00	3.00	0	.00
0 5.40	.01217					.00831	.04		1.71			3.00		
0 301.62	3416.91	1.87	3418.78	556.0	6.52	.66	3419.44	.00	1.74	6.00	40.00	3.00	0	.00
0 4.62	.01217					.00962	.04		1.71			3.00		
0 306.24	3416.97	1.79	3418.76	556.0	6.84	.73	3419.49	.00	1.74	6.00	40.00	3.00	0	.00
0 1.41	.01217					.01059	.01		1.71			3.00		
0 307.66	3416.99	1.77	3418.75	556.0	6.95	.75	3419.50	.00	1.74	6.00	40.00	3.00	0	.00
OHYDRAULIC JUMP												3.00		
0 307.66	3416.99	1.71	3418.69	556.0	7.22	.81	3419.50	.00	1.74	6.00	40.00	3.00	0	.00
0 280.34	.01217					.01219	3.42		1.71			3.00		
0 588.00	3420.40	1.71	3422.11	556.0	7.22	.81	3422.92	.00	1.74	6.00	40.00	3.00	0	.00

WATER SURFACE PROFILE LISTING

KINGMAN MASTER DRAINAGE PLAN

LINE Ce

Q10

O	STATION	INVERT ELEV	DEPTH OF FLOW	W.S. ELEV	Q	VEL	VEL HEAD	ENERGY GRD.EL.	SUPER ELEV	CRITICAL DEPTH		HGT/ DIA	BASE/ ID NO.	ZL	NO PIER	AVBPR
O	L/ELEM	SO					SF AVE	HF			NORM DEPTH			ZR		
0	.00	.01217					.01219	.00			1.71			3.00		
0	588.00	3420.40	1.71	3422.11	556.0	7.22	.81	3422.92	.00	1.74		6.00	40.00	3.00	0	.00
0	588.82	.01217					.01219	7.18			1.71			3.00		
0	1176.82	3427.57	1.71	3429.27	556.0	7.22	.81	3430.08	.00	1.74		6.00	40.00	3.00	0	.00
0	3.66	.01217					.01225	.04			1.71			3.00		
0	1180.49	3427.61	1.70	3429.31	556.0	7.24	.82	3430.13	.00	1.74		6.00	40.00	3.00	0	.00
0	9.01	.01217					.01329	.12			1.71			3.00		
0	1189.50	3427.72	1.63	3429.35	556.0	7.59	.90	3430.25	.00	1.74		6.00	40.00	3.00	0	.00
0	6.50	.01217					.01539	.10			1.71			3.00		
0	1196.00	3427.80	1.56	3429.36	556.0	7.97	.99	3430.35	.00	1.74		6.00	40.00	3.00	0	.00
0	.00	.01217					.01652	.00			1.71			3.00		
0	1196.00	3427.80	1.56	3429.36	556.0	7.97	.99	3430.35	.00	1.74		6.00	40.00	3.00	0	.00
0	871.83	.01652					.01652	14.40			1.56			3.00		
0	2067.83	3442.20	1.56	3443.76	556.0	7.97	.99	3444.75	.00	1.74		6.00	40.00	3.00	0	.00
0	24.17	.01652					.01758	.42			1.56			3.00		
0	2092.00	3442.60	1.51	3444.11	556.0	8.28	1.07	3445.17	.00	1.74		6.00	40.00	3.00	0	.00
0	1010.35	.01863					.01863	18.83			1.51			3.00		
0	3102.35	3461.42	1.51	3462.93	556.0	8.28	1.07	3464.00	.00	1.74		6.00	40.00	3.00	0	.00
0	25.65	.01863					.01874	.48			1.51			3.00		
0	3128.00	3461.90	1.50	3463.40	556.0	8.31	1.07	3464.48	.00	1.74		6.00	40.00	3.00	0	.00
0	846.32	.01881					.01885	15.95			1.50			3.00		
0	3974.32	3477.82	1.50	3479.32	556.0	8.31	1.07	3480.39	.00	1.74		6.00	40.00	3.00	0	.00
0	41.68	.01881					.01874	.78			1.50			3.00		
0	4016.00	3478.60	1.51	3480.11	556.0	8.28	1.07	3481.17	.00	1.74		6.00	40.00	3.00	0	.00
0	1007.62	.01863					.01863	18.77			1.51			3.00		
0	5023.62	3497.37	1.51	3498.88	556.0	8.28	1.07	3499.95	.00	1.74		6.00	40.00	3.00	0	.00
0	28.38	.01863					.01994	.57			1.51			3.00		
0	5052.00	3497.90	1.45	3499.35	556.0	8.64	1.16	3500.51	.00	1.74		6.00	40.00	3.00	0	.00
0	.00	.01863					.02125	.00			1.51			3.00		
0	5052.00	3497.90	1.45	3499.35	556.0	8.64	1.16	3500.51	.00	1.74		6.00	40.00	3.00	0	.00
0	923.98	.02123					.02125	19.64			1.45			3.00		
0	5975.98	3517.52	1.45	3518.97	556.0	8.64	1.16	3520.13	.00	1.74		6.00	40.00	3.00	0	.00
0	22.68	.02123					.02131	.48			1.45			3.00		
0	5998.66	3518.00	1.45	3519.45	556.0	8.65	1.16	3520.61	.00	1.74		6.00	40.00	3.00	0	.00

WATER SURFACE PROFILE LISTING

KINGMAN MASTER DRAINAGE PLAN

LINE Ce

Q10

O STATION / O L/ELEM	INVERT ELEV / SO	DEPTH OF FLOW	W.S. ELEV	Q	VEL	VEL HEAD / SF AVE	ENERGY GRD.EL. / HF	SUPER ELEV	CRITICAL DEPTH / NORM DEPTH	HGT/ DIA	BASE/ ID NO.	ZL / ZR	NO PIER	AVBPR
0 29.88	.02123					.02307	.69		1.45			3.00		
0 6028.54	3518.64	1.39	3520.02	556.0	9.08	1.28	3521.30	.00	1.74	6.00	40.00	3.00	0	.00
0 12.46	.02123					.02676	.33		1.45			3.00		
0 6041.00	3518.90	1.33	3520.23	556.0	9.52	1.41	3521.64	.00	1.74	6.00	40.00	3.00	0	.00
0 969.47	.02871					.02874	27.86		1.33			3.00		
0 7010.47	3546.74	1.33	3548.07	556.0	9.52	1.41	3549.47	.00	1.74	6.00	40.00	3.00	0	.00
0 26.53	.02871					.02881	.76		1.33			3.00		
0 7037.00	3547.50	1.33	3548.83	556.0	9.53	1.41	3550.24	.00	1.74	6.00	40.00	3.00	0	.00
0 84.10	.02883					.02889	2.43		1.33			3.00		
0 7121.10	3549.93	1.33	3551.25	556.0	9.53	1.41	3552.66	.00	1.74	6.00	40.00	3.00	0	.00
0 39.92	.02883					.02840	1.13		1.33			3.00		
0 7161.03	3551.08	1.34	3552.42	556.0	9.43	1.38	3553.80	.00	1.74	6.00	40.00	3.00	0	.00
0 23.12	.02883					.02598	.60		1.33			3.00		
0 7184.15	3551.74	1.40	3553.14	556.0	8.99	1.26	3554.40	.00	1.74	6.00	40.00	3.00	0	.00
0 8.09	.02883					.02240	.18		1.33			3.00		
0 7192.24	3551.98	1.46	3553.44	556.0	8.57	1.14	3554.58	.00	1.74	6.00	40.00	3.00	0	.00
0 4.12	.02883					.01932	.08		1.33			3.00		
0 7196.35	3552.09	1.53	3553.62	556.0	8.17	1.04	3554.66	.00	1.74	6.00	40.00	3.00	0	.00
0 2.23	.02883					.01667	.04		1.33			3.00		
0 7198.58	3552.16	1.59	3553.75	556.0	7.79	.94	3554.70	.00	1.74	6.00	40.00	3.00	0	.00
0 1.10	.02883					.01438	.02		1.33			3.00		
0 7199.68	3552.19	1.66	3553.85	556.0	7.43	.86	3554.71	.00	1.74	6.00	40.00	3.00	0	.00
0 .32	.02883					.01241	.00		1.33			3.00		
0 7200.00	3552.20	1.74	3553.94	556.0	7.08	.78	3554.72	.00	1.74	6.00	40.00	3.00	0	.00

WATER SURFACE PROFILE LISTING

KINGMAN MASTER DRAINAGE PLAN

LINE Cf

Q10

O STATION / O L/ELEM	INVERT ELEV / SO	DEPTH OF FLOW	W.S. ELEV	Q	VEL	VEL HEAD / SF AVE	ENERGY GRD.EL. / HF	SUPER ELEV	CRITICAL DEPTH	NORM DEPTH	HGT/ DIA	BASE/ ID NO.	ZL / ZR	NO PIER	AVBPR
0 .00	3472.00	3.50	3475.50	609.0	3.45	.18	3475.68	.00	1.84		6.00	40.00	3.00	0	.00
0 13.47	.01000					.00129	.02			1.91			3.00		
0 13.47	3472.13	3.36	3475.50	609.0	3.61	.20	3475.70	.00	1.84		6.00	40.00	3.00	0	.00
0 13.02	.01000					.00149	.02			1.91			3.00		
0 26.49	3472.26	3.23	3475.50	609.0	3.79	.22	3475.72	.00	1.84		6.00	40.00	3.00	0	.00
0 12.59	.01000					.00171	.02			1.91			3.00		
0 39.08	3472.39	3.11	3475.50	609.0	3.98	.25	3475.74	.00	1.84		6.00	40.00	3.00	0	.00
0 10.92	.01000					.00195	.02			1.91			3.00		
0 50.00	3472.50	3.00	3475.50	609.0	4.15	.27	3475.76	.00	1.84		6.00	40.00	3.00	0	.00
0 30.33	.00526					.00224	.07			2.30			3.00		
0 80.33	3472.66	2.88	3475.54	609.0	4.35	.29	3475.83	.00	1.84		6.00	40.00	3.00	0	.00
0 31.65	.00526					.00258	.08			2.30			3.00		
0 111.99	3472.83	2.76	3475.59	609.0	4.56	.32	3475.91	.00	1.84		6.00	40.00	3.00	0	.00
0 34.06	.00526					.00297	.10			2.30			3.00		
0 146.05	3473.01	2.65	3475.66	609.0	4.79	.36	3476.01	.00	1.84		6.00	40.00	3.00	0	.00
0 38.64	.00526					.00343	.13			2.30			3.00		
0 184.69	3473.21	2.55	3475.76	609.0	5.02	.39	3476.15	.00	1.84		6.00	40.00	3.00	0	.00
0 48.59	.00526					.00396	.19			2.30			3.00		
0 233.28	3473.46	2.44	3475.91	609.0	5.26	.43	3476.34	.00	1.84		6.00	40.00	3.00	0	.00
0 80.22	.00526					.00457	.37			2.30			3.00		
0 313.50	3473.89	2.35	3476.23	609.0	5.52	.47	3476.71	.00	1.84		6.00	40.00	3.00	0	.00
0 138.20	.00526					.00508	.70			2.30			3.00		
0 451.70	3474.61	2.30	3476.91	609.0	5.66	.50	3477.41	.00	1.84		6.00	40.00	3.00	0	.00
0 738.30	.00526					.00526	3.89			2.30			3.00		
0 1190.00	3478.50	2.30	3480.80	609.0	5.66	.50	3481.29	.00	1.84		6.00	40.00	3.00	0	.00
OTRANS STR	.15000												3.00		
0 1210.00	3481.50	1.59	3483.09	609.0	8.57	1.14	3484.23	.00	1.84		6.00	40.00	3.00	0	.00
0 10.00	.02000					.01812	.18			1.56			3.00		
0 1220.00	3481.70	1.62	3483.32	609.0	8.37	1.09	3484.41	.00	1.84		6.00	40.00	3.00	0	.00
0 2345.39	.01743					.01746	40.95			1.62			3.00		
0 3565.39	3522.57	1.62	3524.19	609.0	8.37	1.09	3525.28	.00	1.84		6.00	40.00	3.00	0	.00
0 24.61	.01743					.01638	.40			1.62			3.00		
0 3590.00	3523.00	1.68	3524.68	609.0	8.02	1.00	3525.69	.00	1.84		6.00	40.00	3.00	0	.00
OTRANS STR	.15000					.14782	2.96						3.00		

WATER SURFACE PROFILE LISTING

KINGMAN MASTER DRAINAGE PLAN

LINE Cf

Q10

O STATION / O L/ELEM	INVERT ELEV / SO	DEPTH OF FLOW	W.S. ELEV	Q	VEL	VEL HEAD / SF AVE	ENERGY GRD.EL. / HF	SUPER ELEV	CRITICAL DEPTH / NORM DEPTH	HGT/ DIA	BASE/ ID NO.	ZL / ZR	NO PIER	AVBPR
0 3610.00	3526.00	1.84	3527.84	609.0	7.27	.82	3528.66	.00	1.84	6.00	40.00	3.00	0	.00
0 5.41	.01001					.01065	.06		1.91			3.00		
0 3615.41	3526.05	1.91	3527.96	609.0	6.99	.76	3528.72	.00	1.84	6.00	40.00	3.00	0	.00
0 4.59	.01001					.01001	.05		1.91			3.00		
0 3620.00	3526.10	1.91	3528.01	609.0	6.99	.76	3528.77	.00	1.84	6.00	40.00	3.00	0	.00
0 .26	.01260					.01002	.00		1.78			3.00		
0 3620.26	3526.10	1.91	3528.01	609.0	6.99	.76	3528.77	.00	1.84	6.00	40.00	3.00	0	.00
OHYDRAULIC JUMP												3.00		
0 3620.26	3526.10	1.78	3527.89	609.0	7.54	.88	3528.77	.00	1.84	6.00	40.00	3.00	0	.00
0 2756.98	.01260					.01262	34.80		1.78			3.00		
0 6377.24	3560.84	1.78	3562.62	609.0	7.54	.88	3563.50	.00	1.84	6.00	40.00	3.00	0	.00
0 12.76	.01260					.01346	.17		1.78			3.00		
0 6390.00	3561.00	1.72	3562.72	609.0	7.85	.96	3563.68	.00	1.84	6.00	40.00	3.00	0	.00
OTRANS STR	.15000					.14896	2.98					3.00		
0 6410.00	3564.00	1.79	3565.79	609.0	7.52	.88	3566.66	.00	1.84	6.00	40.00	3.00	0	.00
0 1.38	.01001					.01291	.02		1.91			3.00		
0 6411.38	3564.01	1.76	3565.77	609.0	7.67	.91	3566.68	.00	1.84	6.00	40.00	3.00	0	.00
0 4.11	.01001					.01435	.06		1.91			3.00		
0 6415.49	3564.05	1.68	3565.74	609.0	8.04	1.00	3566.74	.00	1.84	6.00	40.00	3.00	0	.00
0 4.51	.01001					.01662	.07		1.91			3.00		
0 6420.00	3564.10	1.61	3565.71	609.0	8.43	1.11	3566.82	.00	1.84	6.00	40.00	3.00	0	.00
0 3923.19	.01781					.01783	69.97		1.61			3.00		
0 10343.19	3633.99	1.61	3635.60	609.0	8.43	1.11	3636.70	.00	1.84	6.00	40.00	3.00	0	.00
0 31.87	.01781					.01769	.56		1.61			3.00		
0 10375.06	3634.56	1.62	3636.17	609.0	8.39	1.09	3637.27	.00	1.84	6.00	40.00	3.00	0	.00
0 19.48	.01781					.01635	.32		1.61			3.00		
0 10394.54	3634.90	1.69	3636.59	609.0	8.00	.99	3637.59	.00	1.84	6.00	40.00	3.00	0	.00
0 4.49	.01781					.01412	.06		1.61			3.00		
0 10399.03	3634.98	1.76	3636.75	609.0	7.63	.90	3637.65	.00	1.84	6.00	40.00	3.00	0	.00
0 .97	.01781					.01219	.01		1.61			3.00		
0 10400.00	3635.00	1.84	3636.84	609.0	7.27	.82	3637.66	.00	1.84	6.00	40.00	3.00	0	.00

1

WATER SURFACE PROFILE LISTING

KINGMAN MASTER DRAINAGE PLAN

LINE Cg

Q10

O	STATION	INVERT ELEV	DEPTH OF FLOW	W.S. ELEV	Q	VEL	VEL HEAD	ENERGY GRD.EL.	SUPER ELEV	CRITICAL DEPTH		HGT/ DIA	BASE/ ID NO.	ZL	NO PIER	AVBPR
O	L/ELEM	SO					SF AVE	HF			NORM DEPTH			ZR		
0	.00	3510.00	3.00	3513.00	528.0	3.59	.20	3513.20	.00	1.68		6.00	40.00	3.00	0	.00
0	13.22	.00913					.00167	.02			1.80			3.00		
0	13.22	3510.12	2.88	3513.00	528.0	3.77	.22	3513.22	.00	1.68		6.00	40.00	3.00	0	.00
0	12.84	.00913					.00193	.02			1.80			3.00		
0	26.07	3510.24	2.77	3513.00	528.0	3.95	.24	3513.25	.00	1.68		6.00	40.00	3.00	0	.00
0	12.49	.00913					.00222	.03			1.80			3.00		
0	38.55	3510.35	2.66	3513.01	528.0	4.14	.27	3513.28	.00	1.68		6.00	40.00	3.00	0	.00
0	12.17	.00913					.00257	.03			1.80			3.00		
0	50.73	3510.46	2.55	3513.01	528.0	4.35	.29	3513.31	.00	1.68		6.00	40.00	3.00	0	.00
0	11.90	.00913					.00296	.04			1.80			3.00		
0	62.63	3510.57	2.45	3513.02	528.0	4.56	.32	3513.34	.00	1.68		6.00	40.00	3.00	0	.00
0	11.70	.00913					.00342	.04			1.80			3.00		
0	74.33	3510.68	2.35	3513.03	528.0	4.78	.36	3513.38	.00	1.68		6.00	40.00	3.00	0	.00
0	11.57	.00913					.00395	.05			1.80			3.00		
0	85.90	3510.78	2.25	3513.04	528.0	5.01	.39	3513.43	.00	1.68		6.00	40.00	3.00	0	.00
0	11.59	.00913					.00456	.05			1.80			3.00		
0	97.49	3510.89	2.16	3513.05	528.0	5.26	.43	3513.48	.00	1.68		6.00	40.00	3.00	0	.00
0	11.83	.00913					.00527	.06			1.80			3.00		
0	109.32	3511.00	2.07	3513.07	528.0	5.52	.47	3513.54	.00	1.68		6.00	40.00	3.00	0	.00
0	12.54	.00913					.00609	.08			1.80			3.00		
0	121.86	3511.11	1.99	3513.10	528.0	5.78	.52	3513.62	.00	1.68		6.00	40.00	3.00	0	.00
0	14.48	.00913					.00705	.10			1.80			3.00		
0	136.34	3511.24	1.90	3513.15	528.0	6.07	.57	3513.72	.00	1.68		6.00	40.00	3.00	0	.00
0	22.36	.00913					.00815	.18			1.80			3.00		
0	158.70	3511.45	1.82	3513.27	528.0	6.36	.63	3513.90	.00	1.68		6.00	40.00	3.00	0	.00
0	26.94	.00913					.00895	.24			1.80			3.00		
0	185.64	3511.69	1.80	3513.50	528.0	6.46	.65	3514.14	.00	1.68		6.00	40.00	3.00	0	.00
0	884.42	.00913					.00915	8.09			1.80			3.00		
0	1070.06	3519.77	1.80	3521.57	528.0	6.46	.65	3522.22	.00	1.68		6.00	40.00	3.00	0	.00
O	HYDRAULIC JUMP													3.00		
0	1070.06	3519.77	1.57	3521.34	528.0	7.55	.89	3522.22	.00	1.68		6.00	40.00	3.00	0	.00
0	3.03	.00913					.01586	.05			1.80			3.00		
0	1073.08	3519.80	1.50	3521.30	528.0	7.88	.97	3522.27	.00	1.68		6.00	40.00	3.00	0	.00
0	3.58	.00913					.01827	.07			1.80			3.00		

WATER SURFACE PROFILE LISTING

KINGMAN MASTER DRAINAGE PLAN

LINE Cg

Q10

O	STATION	INVERT ELEV	DEPTH OF FLOW	W.S. ELEV	Q	VEL	VEL HEAD	ENERGY GRD.EL.	SUPER ELEV	CRITICAL DEPTH		HGT/ DIA	BASE/ ID NO.	ZL	NO PIER	AVBPR
O	L/ELEM	SO					SF AVE	HF			NORM DEPTH			ZR		
0	1076.66	3519.83	1.44	3521.27	528.0	8.27	1.06	3522.34	.00	1.68		6.00	40.00	3.00	0	.00
0	3.72	.00913					.02119	.08			1.80			3.00		
0	1080.39	3519.87	1.38	3521.25	528.0	8.67	1.17	3522.41	.00	1.68		6.00	40.00	3.00	0	.00
0	3.75	.00913					.02458	.09			1.80			3.00		
0	1084.14	3519.90	1.32	3521.22	528.0	9.09	1.29	3522.51	.00	1.68		6.00	40.00	3.00	0	.00
0	3.71	.00913					.02853	.11			1.80			3.00		
0	1087.84	3519.93	1.26	3521.20	528.0	9.54	1.41	3522.61	.00	1.68		6.00	40.00	3.00	0	.00
0	3.63	.00913					.03312	.12			1.80			3.00		
0	1091.47	3519.97	1.21	3521.18	528.0	10.00	1.56	3522.73	.00	1.68		6.00	40.00	3.00	0	.00
0	3.53	.00913					.03845	.14			1.80			3.00		
0	1095.00	3520.00	1.16	3521.16	528.0	10.49	1.71	3522.87	.00	1.68		6.00	40.00	3.00	0	.00
O	TRANS STR	.40000					.29409	1.47						3.00		
0	1100.00	3522.00	1.68	3523.68	528.0	6.97	.76	3524.44	.00	1.68		6.00	40.00	3.00	0	.00
0	1.86	.00825					.01080	.02			1.86			3.00		
0	1101.86	3522.02	1.75	3523.77	528.0	6.65	.69	3524.46	.00	1.68		6.00	40.00	3.00	0	.00
0	12.87	.00825					.00933	.12			1.86			3.00		
0	1114.74	3522.12	1.83	3523.95	528.0	6.34	.62	3524.58	.00	1.68		6.00	40.00	3.00	0	.00
0	31.64	.00825					.00845	.27			1.86			3.00		
0	1146.38	3522.38	1.86	3524.24	528.0	6.24	.61	3524.84	.00	1.68		6.00	40.00	3.00	0	.00
0	3327.26	.00825					.00825	27.45			1.86			3.00		
0	4473.65	3549.82	1.86	3551.68	528.0	6.24	.61	3552.28	.00	1.68		6.00	40.00	3.00	0	.00
O	HYDRAULIC JUMP													3.00		
0	4473.65	3549.82	1.51	3551.33	528.0	7.84	.96	3552.29	.00	1.68		6.00	40.00	3.00	0	.00
0	.61	.00825					.01679	.01			1.86			3.00		
0	4474.25	3549.83	1.50	3551.33	528.0	7.88	.97	3552.30	.00	1.68		6.00	40.00	3.00	0	.00
0	3.26	.00825					.01827	.06			1.86			3.00		
0	4477.52	3549.86	1.44	3551.30	528.0	8.27	1.06	3552.36	.00	1.68		6.00	40.00	3.00	0	.00
0	3.47	.00825					.02119	.07			1.86			3.00		
0	4480.98	3549.88	1.38	3551.26	528.0	8.67	1.17	3552.43	.00	1.68		6.00	40.00	3.00	0	.00
0	3.55	.00825					.02458	.09			1.86			3.00		
0	4484.53	3549.91	1.32	3551.23	528.0	9.09	1.29	3552.52	.00	1.68		6.00	40.00	3.00	0	.00
0	3.55	.00825					.02853	.10			1.86			3.00		
0	4488.08	3549.94	1.26	3551.21	528.0	9.54	1.41	3552.62	.00	1.68		6.00	40.00	3.00	0	.00
0	3.50	.00825					.03312	.12			1.86			3.00		

WATER SURFACE PROFILE LISTING

KINGMAN MASTER DRAINAGE PLAN

LINE Cg

Q10

O STATION / O L/ELEM	INVERT ELEV / SO	DEPTH OF FLOW	W.S. ELEV	Q	VEL	VEL HEAD / SF AVE	ENERGY GRD.EL. / HF	SUPER ELEV	CRITICAL DEPTH	NORM DEPTH	HGT/ DIA	BASE/ ID NO.	ZL / ZR	NO PIER	AVBPR
0 4491.58	3549.97	1.21	3551.18	528.0	10.00	1.56	3552.74	.00	1.68		6.00	40.00	3.00	0	.00
0 3.42	.00825					.03845	.13			1.86			3.00		
0 4495.00	3550.00	1.16	3551.16	528.0	10.49	1.71	3552.87	.00	1.68		6.00	40.00	3.00	0	.00
OTRANS STR	.40000					.29409	1.47						3.00		
0 4500.00	3552.00	1.68	3553.68	528.0	6.97	.76	3554.44	.00	1.68		6.00	40.00	3.00	0	.00
0 1.36	.00731					.01080	.01			1.92			3.00		
0 4501.36	3552.01	1.75	3553.76	528.0	6.65	.69	3554.45	.00	1.68		6.00	40.00	3.00	0	.00
0 6.88	.00731					.00933	.06			1.92			3.00		
0 4508.24	3552.06	1.83	3553.89	528.0	6.34	.62	3554.52	.00	1.68		6.00	40.00	3.00	0	.00
0 29.99	.00731					.00806	.24			1.92			3.00		
0 4538.23	3552.28	1.91	3554.19	528.0	6.04	.57	3554.76	.00	1.68		6.00	40.00	3.00	0	.00
0 45.83	.00731					.00739	.34			1.92			3.00		
0 4584.06	3552.61	1.92	3554.54	528.0	6.00	.56	3555.10	.00	1.68		6.00	40.00	3.00	0	.00
0 995.09	.00731					.00731	7.28			1.92			3.00		
0 5579.15	3559.88	1.92	3561.81	528.0	6.00	.56	3562.37	.00	1.68		6.00	40.00	3.00	0	.00
OHYDRAULIC JUMP													3.00		
0 5579.15	3559.88	1.46	3561.34	528.0	8.17	1.04	3562.38	.00	1.68		6.00	40.00	3.00	0	.00
0 2.43	.00731					.01995	.05			1.92			3.00		
0 5581.58	3559.90	1.41	3561.31	528.0	8.45	1.11	3562.42	.00	1.68		6.00	40.00	3.00	0	.00
0 3.30	.00731					.02268	.07			1.92			3.00		
0 5584.88	3559.93	1.35	3561.28	528.0	8.86	1.22	3562.50	.00	1.68		6.00	40.00	3.00	0	.00
0 3.38	.00731					.02632	.09			1.92			3.00		
0 5588.26	3559.95	1.29	3561.25	528.0	9.29	1.34	3562.59	.00	1.68		6.00	40.00	3.00	0	.00
0 3.39	.00731					.03054	.10			1.92			3.00		
0 5591.65	3559.98	1.24	3561.21	528.0	9.75	1.48	3562.69	.00	1.68		6.00	40.00	3.00	0	.00
0 3.35	.00731					.03546	.12			1.92			3.00		
0 5595.00	3560.00	1.19	3561.19	528.0	10.22	1.62	3562.81	.00	1.68		6.00	40.00	3.00	0	.00
OTRANS STR	.40000					.33771	1.69						3.00		
0 5600.00	3562.00	1.38	3563.38	528.0	8.66	1.17	3564.55	.00	1.68		6.00	40.00	3.00	0	.00
0 737.98	.02264					.02268	16.74			1.38			3.00		
0 6337.98	3578.71	1.38	3580.09	528.0	8.66	1.17	3581.26	.00	1.68		6.00	40.00	3.00	0	.00
0 15.11	.02264					.02273	.34			1.38			3.00		
0 6353.10	3579.05	1.38	3580.43	528.0	8.67	1.17	3581.60	.00	1.68		6.00	40.00	3.00	0	.00
0 29.70	.02264					.02459	.73			1.38			3.00		

WATER SURFACE PROFILE LISTING

KINGMAN MASTER DRAINAGE PLAN

LINE Cg

Q10

O STATION / O L/ELEM	INVERT ELEV / SO	DEPTH OF FLOW	W.S. ELEV	Q	VEL	VEL HEAD / SF AVE	ENERGY GRD.EL. / HF	SUPER ELEV	CRITICAL DEPTH / NORM DEPTH	HGT/ DIA	BASE/ ID NO.	ZL / ZR	NO PIER	AVBPR
0 6382.79	3579.72	1.32	3581.04	528.0	9.09	1.29	3582.33	.00	1.68	6.00	40.00	3.00	0	.00
0 12.21	.02264					.02854	.35		1.38			3.00		
0 6395.00	3580.00	1.26	3581.26	528.0	9.54	1.41	3582.68	.00	1.68	6.00	40.00	3.00	0	.00
0 1255.22	.03065					.03066	38.49		1.26			3.00		
0 7650.22	3618.47	1.26	3619.74	528.0	9.54	1.41	3621.15	.00	1.68	6.00	40.00	3.00	0	.00
0 35.03	.03065					.03266	1.14		1.26			3.00		
0 7685.25	3619.55	1.22	3620.77	528.0	9.92	1.53	3622.30	.00	1.68	6.00	40.00	3.00	0	.00
0 14.75	.03065					.03746	.55		1.26			3.00		
0 7700.00	3620.00	1.17	3621.17	528.0	10.40	1.68	3622.85	.00	1.68	6.00	40.00	3.00	0	.00
OTRANS STR	.40000					.30202	1.51					3.00		
0 7705.00	3622.00	1.59	3623.59	528.0	7.43	.86	3624.45	.00	1.68	6.00	40.00	3.00	0	.00
OTRANS STR	.40000					.08546	.00					3.00		
0 7705.00	3622.00	1.59	3623.59	528.0	7.43	.86	3624.45	.00	1.68	6.00	40.00	3.00	0	.00
0 2679.69	.01410					.01411	37.82		1.59			3.00		
0 10384.69	3659.78	1.59	3661.37	528.0	7.43	.86	3662.23	.00	1.68	6.00	40.00	3.00	0	.00
0 12.08	.01410					.01378	.17		1.59			3.00		
0 10396.77	3659.95	1.61	3661.56	528.0	7.32	.83	3662.40	.00	1.68	6.00	40.00	3.00	0	.00
0 3.23	.01410					.01252	.04		1.59			3.00		
0 10400.00	3660.00	1.68	3661.68	528.0	6.97	.76	3662.44	.00	1.68	6.00	40.00	3.00	0	.00
1														